INXPECT SAFETY RADAR EQUIPMENT

Product catalogue

INXPECT

INXPECT SAFETY RADAR EQUIPMENT

Industrial safety at its best: Inxpect safety radars detect access or presence of operators in dangerous areas and also have the ability to dynamically set the detection and warning zones.

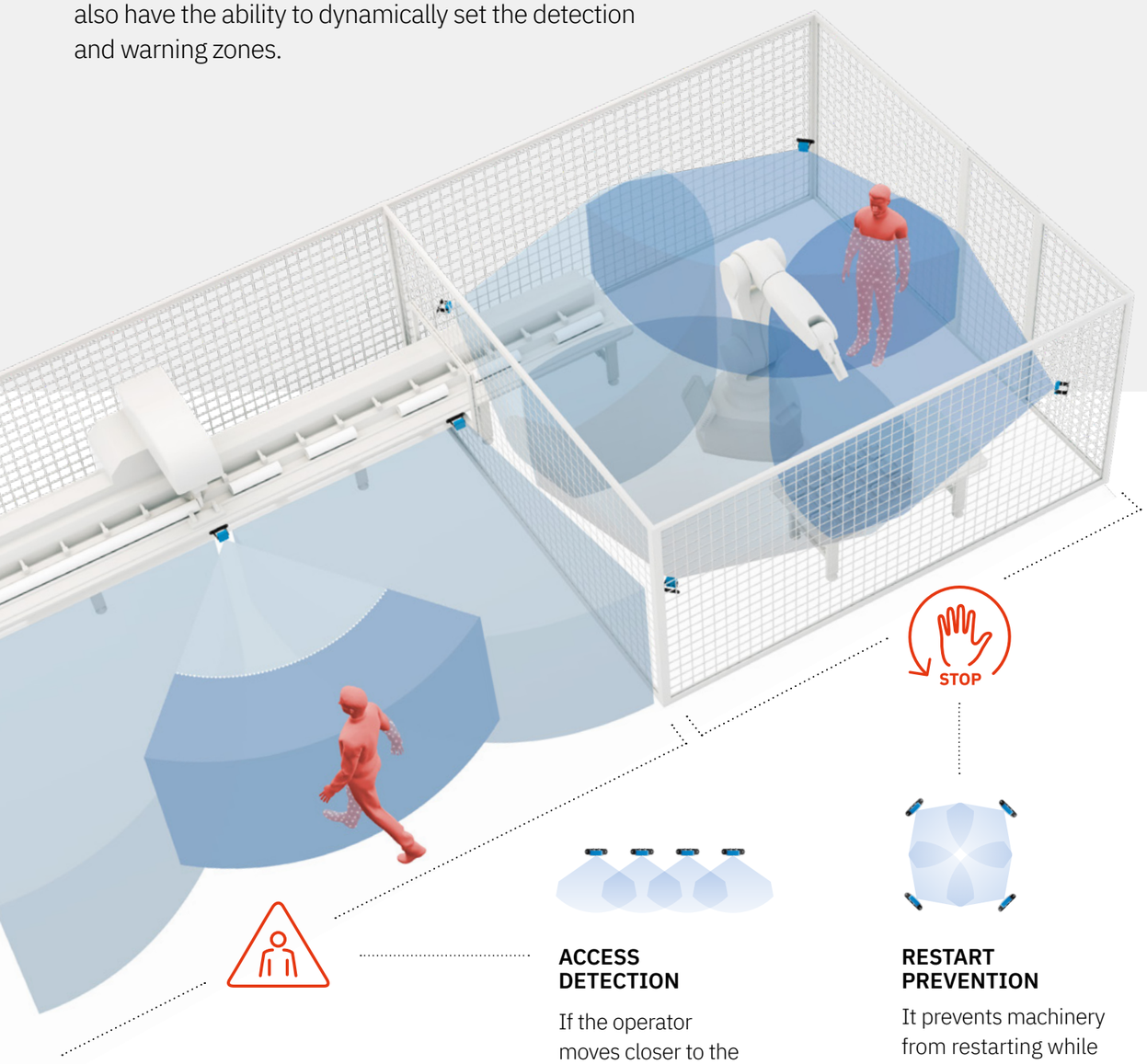

ACCESS DETECTION

If the operator moves closer to the dangerous area, it places machinery in a safe state.

RESTART PREVENTION

It prevents machinery from restarting while operators are in the dangerous area.

Inxpect product catalogue v3.8 - Copyright © 2026 Inxpect S.p.A. - All rights reserved. - inxpect.com - safety@inxpect.com - Designed and manufactured in Italy by Inxpect.
"Inxpect" and its logo are registered trademarks of Inxpect S.p.A. - Technical specifications subject to change without notice. - All pictures shown are for illustration purposes only.

WORLD'S FIRST

SIL2/PLd and UL Listed safety radar products

UL CERTIFIED SAFETY US·CA E509636

SIL2 PLd CERTIFIED

DYNAMIC MODIFICATION OF DETECTION ZONES

The sensor parameters can be configured in real-time, allowing a dynamic modification of the detection zone. This feature makes Inxpect sensors perfect solutions for mobile robotic applications.

IMPROVE THE COMMUNICATION WITH MACHINERY

The modular fieldbus allows Inxpect Radar Sensors to exchange safety data, such as the position of the target, in real time with the machinery's PLC. This allows an effective integration with the machinery's control system.

SECURE CONFIGURATION

Whether you chose USB or Ethernet for configuring Inxpect Safety Radar Products, we got you covered. In all cases, Inxpect control units and the Inxpect Safety Application cooperate in full security.

RESPONSE TIME < 100 MS

With response times lower than 100 ms, you can save space and reduce the area required to stop the machinery.

Inxpect product catalogue v3.8 - Copyright © 2026 Inxpect S.p.A. - All rights reserved. - inxpect.com - safety@inxpect.com - Designed and manufactured in Italy by Inxpect.
"Inxpect" and its logo are registered trademarks of Inxpect S.p.A. - Technical specifications subject to change without notice. - All pictures shown are for illustration purposes only.

LIGHT

RESISTANT TO DISTURBANCES

Optical devices often fail due to dust, smoke, water or waste generated by the production process. The Inxpect team, highly specialized in radar technology, has developed a sophisticated long range radar algorithm that filters out those disturbances, reducing false alarms and increasing productivity.

Inxpect Safety Radar Sensors ensure reliable detection even in challenging conditions, including **light**, **smoke**, **dust**, **debris**, and **rain** (up to 45 mm/h).

DUST

Inxpect works where optical sensors stop.
High safety without compromising productivity.

DEBRIS

RAIN

Inxpect product catalogue v3.8 - Copyright © 2026 Inxpect S.p.A. - All rights reserved. - inxpect.com - safety@inxpect.com - Designed and manufactured in Italy by Inxpect.
"Inxpect" and its logo are registered trademarks of Inxpect S.p.A. - Technical specifications subject to change without notice. - All pictures shown are for illustration purposes only.

" Inxpect is a young tech company with an extraordinary team and corporate culture, which have allowed the company to develop the most advanced safety radar in the world "

Passion is what guides our team, a passion that continues to grow from month to month: that is the driving force that makes anything possible, and that made Inxpect the first company in the world (and the only one to date) to create a SIL-certified safety radar system.

We have in-depth knowledge of the global safety market. We know all of its demands and secrets. We know what different industries need and we are here to change the idea of safety from how it is perceived today to bring it to a totally new level. Inxpect is an international company with offices in Italy, Germany, North America, China and with future plans to have a direct presence in many other countries.

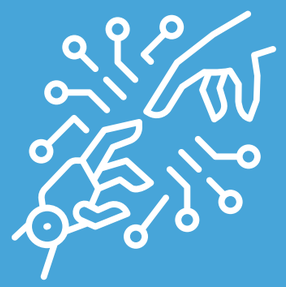

25+
millions euro raised

25000+
working installations

30+
active patents families

20+
PhDs in core R&D

55+
worldwide partnership in safety and robotics

Inxpect product catalogue v3.8 - Copyright © 2026 Inxpect S.p.A. - All rights reserved. - inxpect.com - safety@inxpect.com - Designed and manufactured in Italy by Inxpect.
"Inxpect" and its logo are registered trademarks of Inxpect S.p.A. - Technical specifications subject to change without notice. - All pictures shown are for illustration purposes only.

Inxpect Safety Radar Equipment

is flexible, modular and scalable

Inxpect Safety Radar systems are composed of a **control unit** and up to six **radar** sensors*: high flexibility, from simple to complex scenarios.

Configuring the system is quick and easy, thanks to the user friendly **Inxpect Safety Studio**.

Guided validation procedures and the simple generation of the configuration report complete each installation.

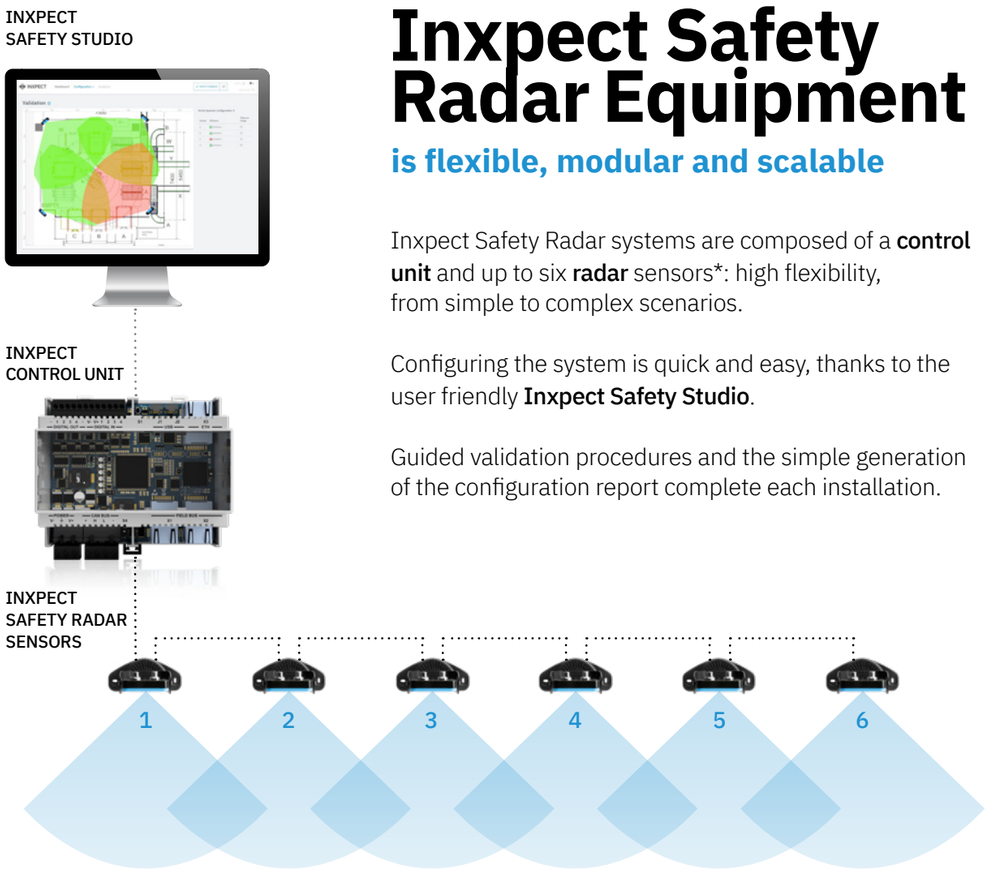

*For the Plug&Safe Line and Omni Line, the number of sensors that can be connected to the control unit is up to five.

Target information as distance and angle are always available in real time.

The Inxpect Safety Application allows to set up to 32 different configurations to be selected dynamically in real time.

Programmable Muting function: the configuration of sensor groups that can be temporarily muted allows operators to safely access parts of the dangerous area, according to production needs.

Inxpect product catalogue v3.8 - Copyright © 2026 Inxpect S.p.A. - All rights reserved. - inxpect.com - safety@inxpect.com - Designed and manufactured in Italy by Inxpect.
"Inxpect" and its logo are registered trademarks of Inxpect S.p.A. - Technical specifications subject to change without notice. - All pictures shown are for illustration purposes only.

Inxpect Safety Studio

Welcome to the future of 3D configuration

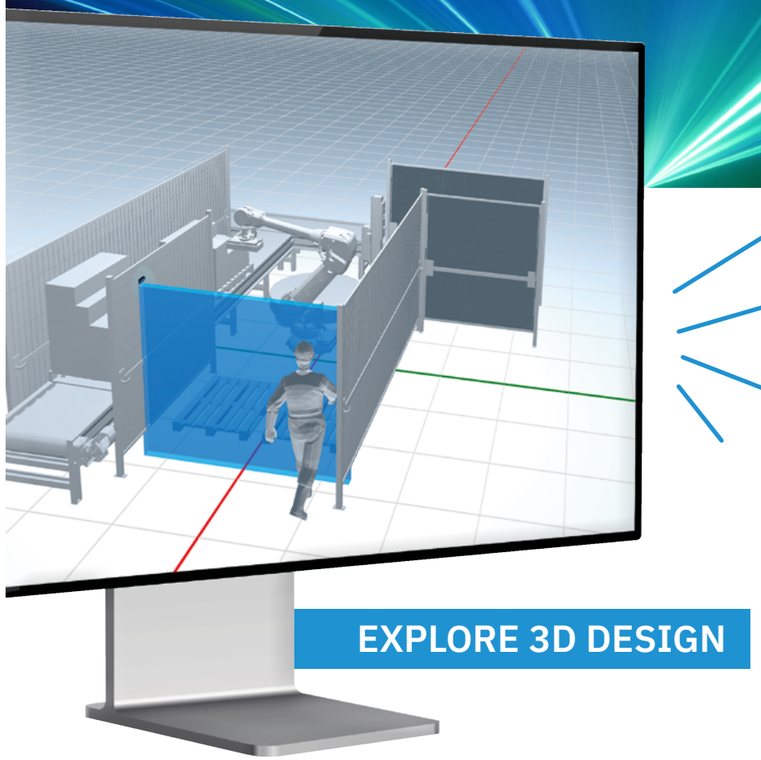

The next generation of software is here.

3D FIELDS OF VIEW

FOVs have no more secrets! Thanks to 3D visualization they are now easier to set up and manage. You can see the radar-protected field in the application area.

MULTI-SYSTEM PROJECTS

The new Inxpect Safety Studio can manage multiple control units with their sensors, making it the most advanced software out there.

OFFLINE MODE

You can work in online and offline modes. You can carry out all projects anywhere without connected sensors, from feasibility study to deployment.

NEW GRAPHICS

Advanced functions in a more intuitive interface!

Configuring Inxpect sensors is FASTER and MORE INTUITIVE than ever before.

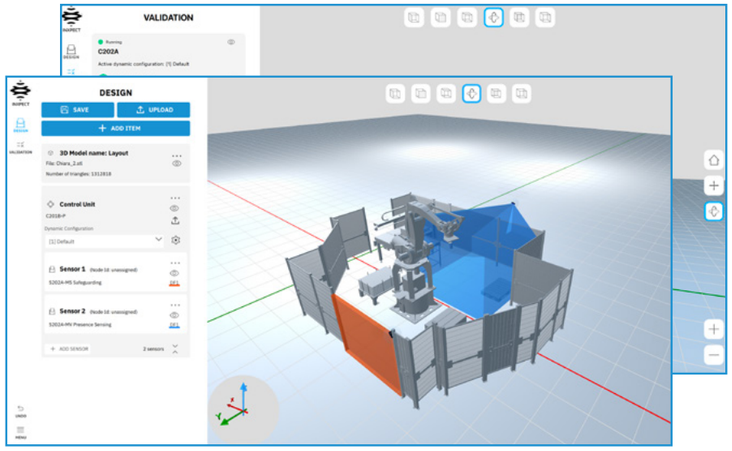

Inxpect product catalogue v3.8 - Copyright © 2026 Inxpect S.p.A. - All rights reserved. - inxpect.com - safety@inxpect.com - Designed and manufactured in Italy by Inxpect.
"Inxpect" and its logo are registered trademarks of Inxpect S.p.A. - Technical specifications subject to change without notice. - All pictures shown are for illustration purposes only.

Restart Prevention

Inxpect radar sensors are designed to monitor the presence of people in the area and, at the same time, filter out static objects (these objects do not stop the machine).

RESTART

Static objects in the area are filtered out. The robot restarts and continues its operating cycle.

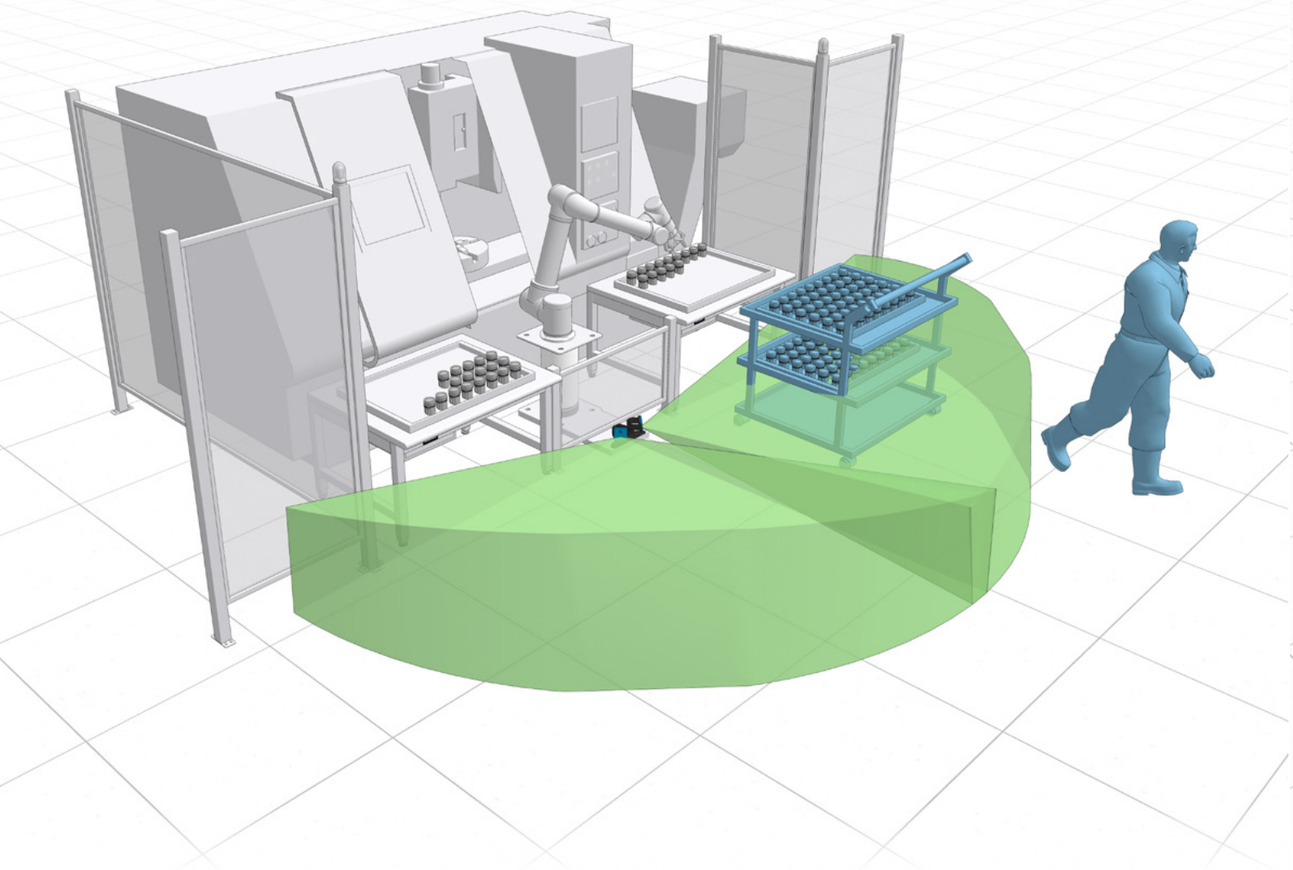

S200 sensors introduce Restart Prevention with Static Object Detection

When needed, an additional function can be activated: **Static Object Detection.**

This feature allows you to detect even static objects in the area keeping the machine in stop.
It is particularly important to avoid collision with potential obstacles in mobile applications such as overhead gantries, AGVs, self-driving vehicles, etc.

STOP

When Static Object Detection is active and there are obstacles in the area the system prevents the restart of the machine.

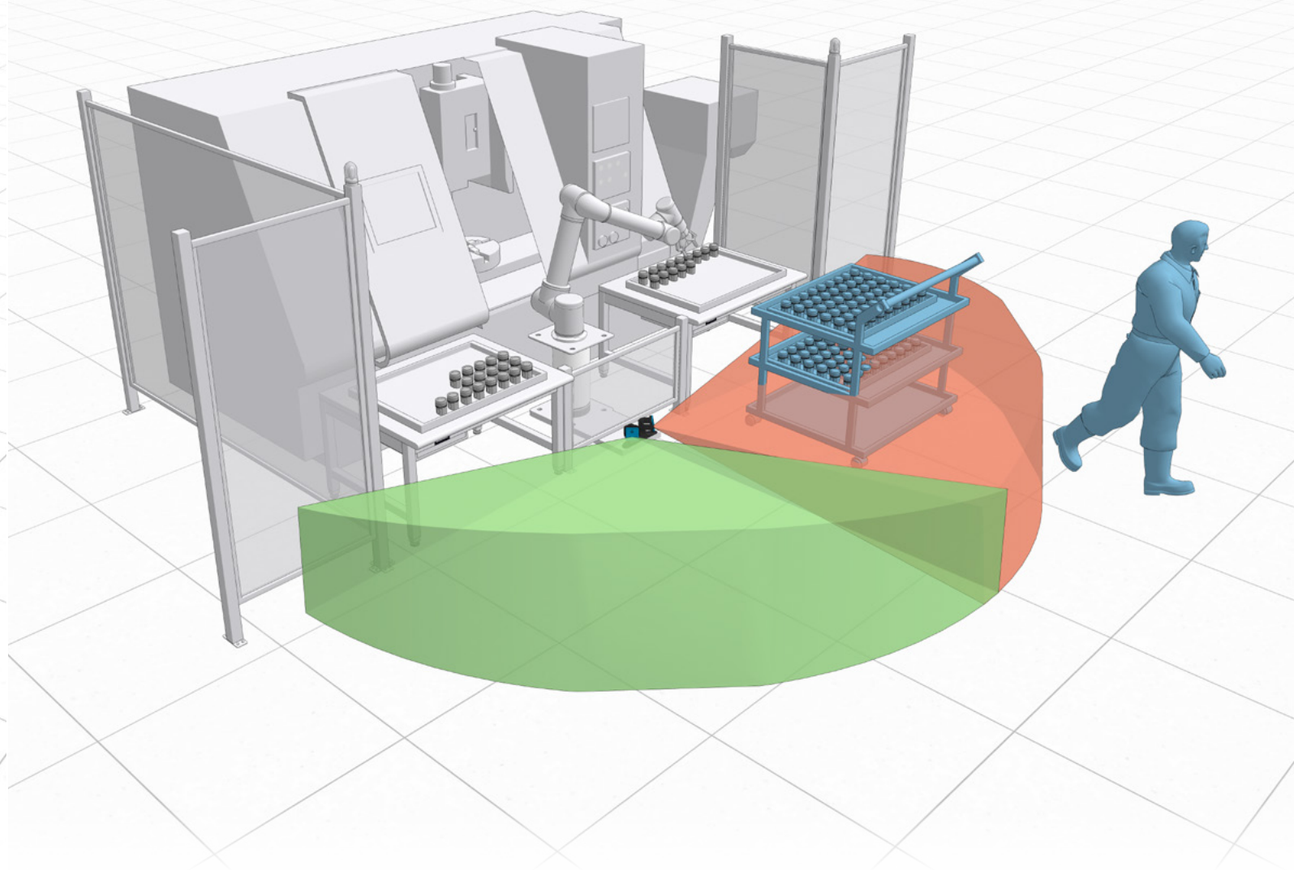

Inxpect product catalogue v3.8 - Copyright © 2026 Inxpect S.p.A. - All rights reserved. - inxpect.com - safety@inxpect.com - Designed and manufactured in Italy by Inxpect.
“Inxpect” and its logo are registered trademarks of Inxpect S.p.A. - Technical specifications subject to change without notice. - All pictures shown are for illustration purposes only.

Inxpect product catalogue v3.8 - Copyright © 2026 Inxpect S.p.A. - All rights reserved. - inxpect.com - safety@inxpect.com - Designed and manufactured in Italy by Inxpect.
“Inxpect” and its logo are registered trademarks of Inxpect S.p.A. - Technical specifications subject to change without notice. - All pictures shown are for illustration purposes only.

RADAR SENSORS

Which radar sensor fits my needs?

Inxpect product catalogue v3.8 - Copyright © 2026 Inxpect S.p.A. - All rights reserved. - inxpect.com - safety@inxpect.com - Designed and manufactured in Italy by Inxpect.
"Inxpect" and its logo are registered trademarks of Inxpect S.p.A. - Technical specifications subject to change without notice. - All pictures shown are for illustration purposes only.

RADAR SENSORS

Technical specifications

SIL2 PLd CERTIFIED · UL CERTIFIED · IEC TS 61496-5 certified

		Vertical angular coverage	Field of View (FOV)	Number of Detection Fields	Sensitive Protective Equipment functions	Additional functions
PRO LINE	S201A-W	20°	Classic Corridor	4	Safeguarding Presence Sensing	-
PRO LINE	S203A-W	12°	Classic Corridor	4	Safeguarding Presence Sensing	-
PRO LINE	S203A-WT	12°	Classic Corridor	4	Safeguarding Presence Sensing	Teach-In
PLUG&SAFE LINE	S202A-MV	Up to 90°	-	1	Presence Sensing	-
PLUG&SAFE LINE	S202A-MS	Up to 90°	-	1	Safeguarding	-
OMNI LINE	S202A-MC2	Up to 90°	Classic Corridor Cuboid	2	Safeguarding Presence Sensing	-
OMNI LINE	S202A-MC4	Up to 90°	Classic Corridor Cuboid	4	Safeguarding Presence Sensing	-
PRO LINE 9M	S201A-WL	20°	Classic Corridor	4	Safeguarding Presence Sensing	Custom target detection
PRO LINE 9M	S203A-WL	12°	Classic Corridor	4	Safeguarding Presence Sensing	Custom target detection
PRO LINE 9M	S203A-WLT	12°	Classic Corridor	4	Safeguarding Presence Sensing	Custom target detection Teach-In

Inxpect product catalogue v3.8 - Copyright © 2026 Inxpect S.p.A. - All rights reserved. - inxpect.com - safety@inxpect.com - Designed and manufactured in Italy by Inxpect.
"Inxpect" and its logo are registered trademarks of Inxpect S.p.A. - Technical specifications subject to change without notice. - All pictures shown are for illustration purposes only.

S201A-W

Scan the QR Code to open the Regulatory Notice Page

200 SERIES *Pro Line*

CORRIDOR FOV

Safety Parameters:

- SIL2 (IEC 61508)
- PLd, Cat. 3 (ISO 13849)
- Performance Class D (IEC/ TS 62998-1)

Inxpect product catalogue v3.8 - Copyright © 2026 Inxpect S.p.A. - All rights reserved. - inxpect.com - safety@inxpect.com - Designed and manufactured in Italy by Inxpect.
"Inxpect" and its logo are registered trademarks of Inxpect S.p.A. - Technical specifications subject to change without notice. - All pictures shown are for illustration purposes only.

S201A-W

Corridor FOV

The **S201A-W** sensor has advanced field of view, i.e. the user can choose whether to use a symmetrical FOV, an asymmetrical FOV (asymmetric angles with respect to the central axis of the sensor) or a corridor FOV (with the sides cut off where required by the application). More and more modularity for all industrial applications!

The sensors perform the following primary functions:

- **Motion and scenario analysis.**
- **Communication to the control unit of processed motion data and diagnostic information.**
- **Static Object Detection: this new option allows to detect static objects in the area where the restart prevention safety function is activated. By doing so it prevents the machinery from restarting when there are obstacles in the area.**

Four independent detection fields with freely adjustable angles (10°-100°) and a maximum total distance of 5 m.

Classic FOV $\alpha = \beta$ or $\alpha \neq \beta$

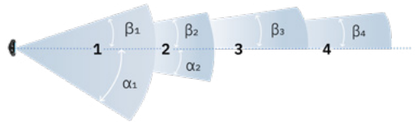

The aperture of each field is dynamically adjustable in 5° increments over a range of 10° to 100°.

Corridor FOV L = R or L ≠ R

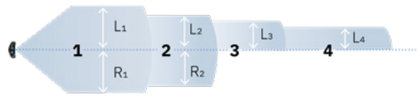

Field of view

0 - 5 m [min. set distance: 0.2 m]
Horizontal Plane: 10-100°
Vertical Plane: 20°

Classic FOV
(with symmetrical or asymmetrical shape)
α: 0°-50° β: 0°-50°

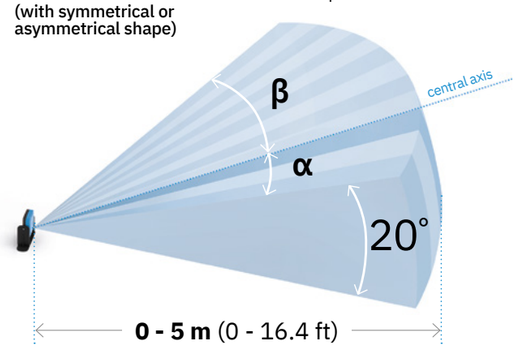

Corridor FOV
(with symmetrical or asymmetrical shape)
L + R ≥ 20 cm

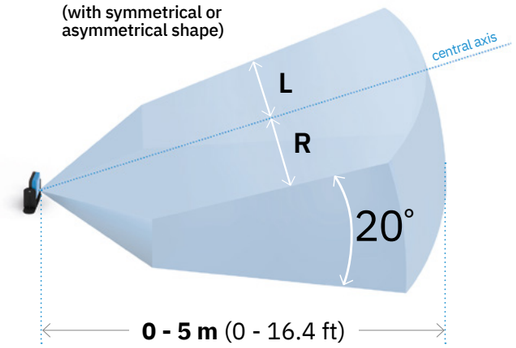

Part No. **90302111**

5m Range sensor
4s Restart timeout
2 m/s Max target speed
20° Vertical plane

Technical details

Frequency	Millimeter waves V-band: 60 GHz
Connectors	Two 5-pin M12 connectors (1 male and 1 female)
CAN bus termination resistance	120 Ω (not supplied, to be installed with termination connector)
Power supply	12 V dc ± 20%, through control unit
Power consumption	2.2 W
Degree of protection	IP67
Operating temperature	From -30 to +60 °C (-22 to +140 °F)
Case material	Sensor: PA66 (front) + Aluminum (back) | Bracket: PA66 and glass fiber (GF)

3-axis bracket:
the sensor can rotate on three axis (x, y, z).

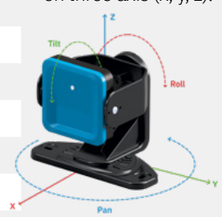

Inxpect product catalogue v3.8 - Copyright © 2026 Inxpect S.p.A. - All rights reserved. - inxpect.com - safety@inxpect.com - Designed and manufactured in Italy by Inxpect.
"Inxpect" and its logo are registered trademarks of Inxpect S.p.A. - Technical specifications subject to change without notice. - All pictures shown are for illustration purposes only.

S203A-W

Scan the QR Code to open the Regulatory Notice Page

200 SERIES *Pro Line*

VERTICAL FOV 12°

Safety Parameters:

- SIL2 (IEC 61508)
- PLd, Cat. 3 (ISO 13849)
- Performance Class D (IEC/TS 62998-1)

Inxpect product catalogue v3.8 - Copyright © 2026 Inxpect S.p.A. - All rights reserved. - inxpect.com - safety@inxpect.com - Designed and manufactured in Italy by Inxpect.
"Inxpect" and its logo are registered trademarks of Inxpect S.p.A. - Technical specifications subject to change without notice. - All pictures shown are for illustration purposes only.

S203A-W

Vertical FOV 12°

The **S203A-W** has an advanced field of view equipped with a vertical angular coverage of only 12° (instead of 20° in previous sensors), making it the most adaptable sensor for Autonomous Guided Vehicles (AGVs).

The sensors perform the following primary functions:

- **Motion and scenario analysis.**
- **Communication to the control unit of processed motion data and diagnostic information.**
- **Static Object Detection: this new option allows to detect static objects in the area where the restart prevention safety function is activated. By doing so it prevents the machinery from restarting when there are obstacles in the area.**

Four independent detection fields with freely adjustable angles (10°-100°) and a maximum total distance of 5 m.

Classic FOV $\alpha = \beta$ or $\alpha \neq \beta$

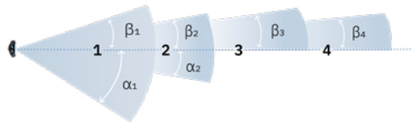

The aperture of each field is dynamically adjustable in 5° increments over a range of 10° to 100°.

Corridor FOV L = R or L ≠ R

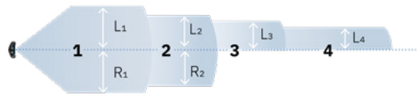

Field of view

0 - 5 m [min. set distance: 0.2 m]
Horizontal Plane: 10-100°
Vertical Plane: 12°

Classic FOV
(with symmetrical or asymmetrical shape)
α: 0°-50° β: 0°-50°

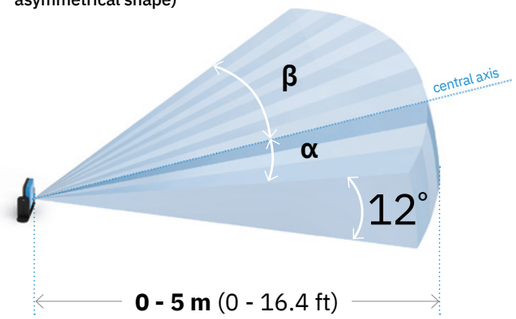

Corridor FOV
(with symmetrical or asymmetrical shape)
L + R ≥ 20 cm

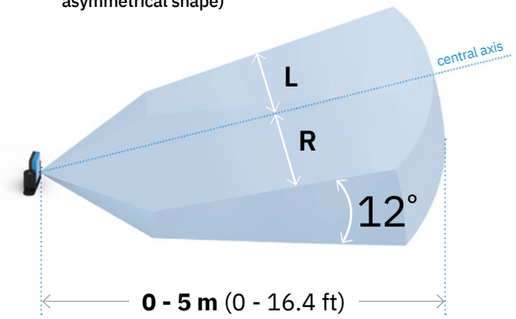

Part No. **90306011**

5m Range sensor | **4s** Restart timeout | **2 m/s** Max target speed | **12°** Vertical plane

Technical details

Frequency	Millimeter waves V-band: 60 GHz
Connectors	Two 5-pin M12 connectors (1 male and 1 female)
CAN bus termination resistance	120 Ω (not supplied, to be installed with termination connector)
Power supply	12 V dc ± 20%, through control unit
Power consumption	2.2 W
Degree of protection	IP67
Operating temperature	From -30 to +60 °C (-22 to +140 °F)
Case material	Sensor: PA66 (front) + Aluminum (back) | Bracket: PA66 and glass fiber (GF)

3-axis bracket:
the sensor can rotate on three axis (x, y, z).

Inxpect product catalogue v3.8 - Copyright © 2026 Inxpect S.p.A. - All rights reserved. - inxpect.com - safety@inxpect.com - Designed and manufactured in Italy by Inxpect.
"Inxpect" and its logo are registered trademarks of Inxpect S.p.A. - Technical specifications subject to change without notice. - All pictures shown are for illustration purposes only.

S203A-WT

Scan the QR Code to open the Regulatory Notice Page

200 SERIES *Pro Line*

VERTICAL FOV 12° WITH THE TEACH-IN FUNCTION

Safety Parameters:

- SIL2 (IEC 61508)
- PLd, Cat. 3 (ISO 13849)
- Performance Class D (IEC/TS 62998-1)

Inxpect product catalogue v3.8 - Copyright © 2026 Inxpect S.p.A. - All rights reserved. - inxpect.com - safety@inxpect.com - Designed and manufactured in Italy by Inxpect.
"Inxpect" and its logo are registered trademarks of Inxpect S.p.A. - Technical specifications subject to change without notice. - All pictures shown are for illustration purposes only.

S203A-WT

Vertical FOV 12° with the Teach-In function

The **S203A-WT** has an advanced field of view with a vertical angular coverage of only 12° (compared with the 20° coverage characteristic of S201A sensors), making it the most adaptable sensor for Autonomous Guided Vehicles (AGVs).

With the Teach-In function, the sensor sets the range of the last detection field according to the distance of the nearest static target detected inside a predetermined volume called "learning area".

Teach-in function

Once the field of view of each sensor has been set, the environment may change due to industrial processes or operational activities. In such cases, the sensors can be affected by the new environmental conditions, potentially generating undesired alarms or leaving areas unprotected by the radar system. The Teach-in function addresses this issue: when enabled via an input, all sensors switch to the "learning phase," allowing them to adapt to the updated environment.

Once activated, the Teach-In learning process begins. All sensors switch to the learning phase, so they detect the nearest target in the area.

At the end of the learning phase, the sensors are updated with the new detection distances, allowing the operator to continue working safely.

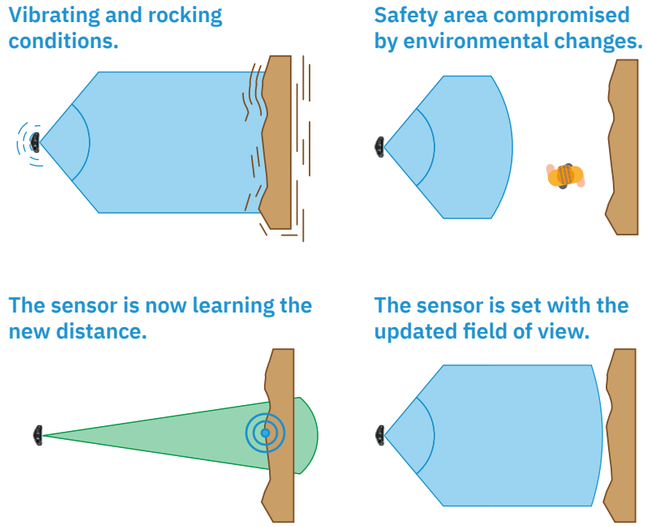

TEACH-IN
ADAPTIVE SAFETY ON DEMAND

Part No. **90306011.5A1**

5m Range sensor | **4s** Restart timeout | **2 m/s** Max target speed | **12°** Vertical plane | **Teach-In function**

Technical details

Frequency	Millimeter waves V-band: 60 GHz
Connectors	Two 5-pin M12 connectors (1 male and 1 female)
CAN bus termination resistance	120 Ω (not supplied, to be installed with termination connector)
Power supply	12 V dc ± 20%, through control unit
Power consumption	2.2 W
Degree of protection	IP67
Operating temperature	From -30 to +60 °C (-22 to +140 °F)
Case material	Sensor: PA66 (front) + Aluminum (back) | Bracket: PA66 and glass fiber (GF)

3-axis bracket: the sensor can rotate on three axis (x, y, z).

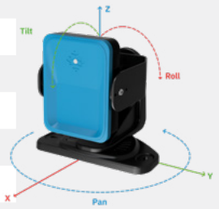

Inxpect product catalogue v3.8 - Copyright © 2026 Inxpect S.p.A. - All rights reserved. - inxpect.com - safety@inxpect.com - Designed and manufactured in Italy by Inxpect.
"Inxpect" and its logo are registered trademarks of Inxpect S.p.A. - Technical specifications subject to change without notice. - All pictures shown are for illustration purposes only.

S202A-MV

Scan the QR Code to open the Regulatory Notice Page

200 SERIES *Plug&Safe Line*

PRESENCE SENSING

Safety Parameters:

- SIL2 (IEC 61508)
- PLd, Cat. 3 (ISO 13849)
- Performance Class D (IEC/TS 62998-1)

Inxpect product catalogue v3.8 - Copyright © 2026 Inxpect S.p.A. - All rights reserved. - inxpect.com - safety@inxpect.com - Designed and manufactured in Italy by Inxpect.
"Inxpect" and its logo are registered trademarks of Inxpect S.p.A. - Technical specifications subject to change without notice. - All pictures shown are for illustration purposes only.

S202A-MV

Presence Sensing

The **S202A-MV sensor** is specially designed for the Presence Sensing function.

It is highly reliable, extremely easy to configure (only 3 parameters are required) and provides maximum operator safety, while dramatically improving productivity.

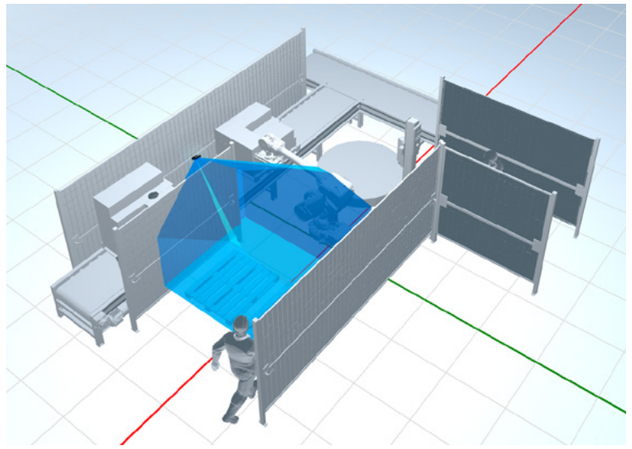

Presence Sensing

Monitor hazardous area preventing the unexpected startup of the machinery while operators are still inside.

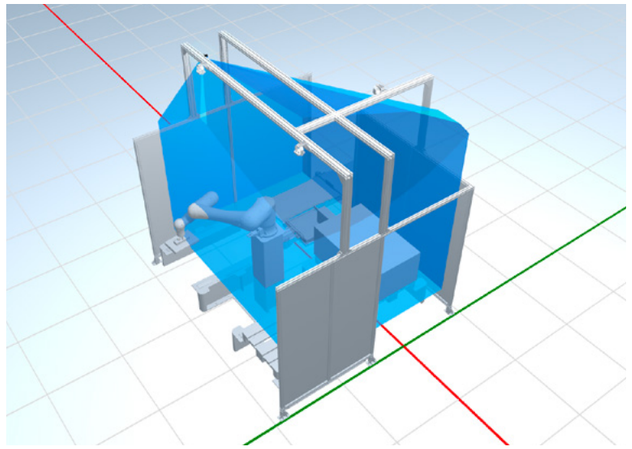

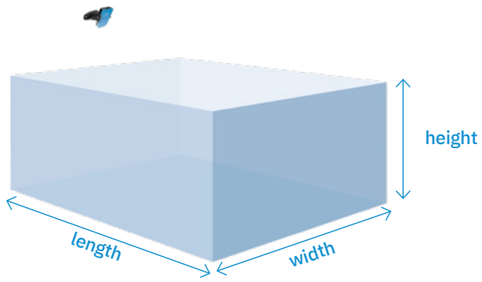

Easy to install
Configuration requires only 3 parameters:
HEIGHT, **LENGTH** and **WIDTH**

Installation height from 250 cm to 300 cm (from Reference Plane). Width from -200 cm to +200 cm (min 50 cm).

Part No. **90307013.1A0**

4m Range sensor

1.6 m/s Max target speed

90° Max vertical plane

EASY to install

Technical details

Frequency	Millimeter waves V-band: 60 GHz
Connectors	Two 5-pin M12 connectors (1 male and 1 female)
CAN bus termination resistance	120 Ω (not supplied, to be installed with termination connector)
Power supply	12 V dc ± 20%, through control unit
Power consumption	2.6 W
Degree of protection	IP67
Operating temperature	From -30 to +60 °C (-22 to +140 °F)
Case material	Sensor: PA66 (front) + Aluminum (back) | Bracket: PA66 and glass fiber (GF)

Inxpect product catalogue v3.8 - Copyright © 2026 Inxpect S.p.A. - All rights reserved. - inxpect.com - safety@inxpect.com - Designed and manufactured in Italy by Inxpect.
"Inxpect" and its logo are registered trademarks of Inxpect S.p.A. - Technical specifications subject to change without notice. - All pictures shown are for illustration purposes only.

S202A-MS

Scan the QR Code to open the Regulatory Notice Page

200 SERIES *Plug&Safe Line*

SAFEGUARDING

Safety Parameters:

- SIL2 (IEC 61508)
- PLd, Cat. 3 (ISO 13849)
- Performance Class D (IEC/ TS 62998-1)

Inxpect product catalogue v3.8 - Copyright © 2026 Inxpect S.p.A. - All rights reserved. - inxpect.com - safety@inxpect.com - Designed and manufactured in Italy by Inxpect.
"Inxpect" and its logo are registered trademarks of Inxpect S.p.A. - Technical specifications subject to change without notice. - All pictures shown are for illustration purposes only.

S202A-MS

Safeguarding

The **S202A-MS sensor** is specially designed for the Safeguarding function.

With this sensor, access control can be carried out easily and immediately in many applications. In fact, it only requires 2 parameters to configure, making it incredibly straightforward to set up.

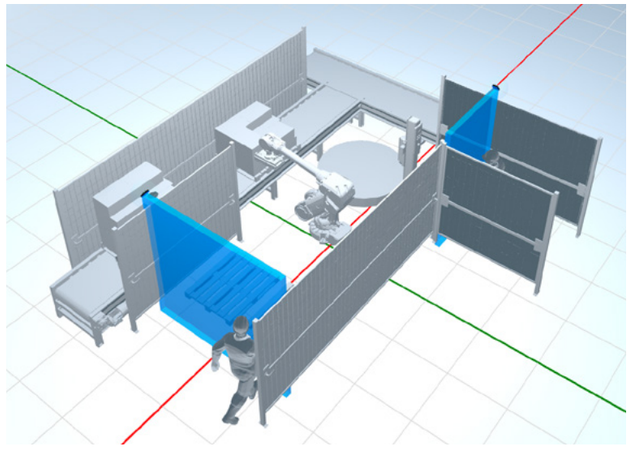

Safeguarding

Use our radar as a virtual wall, safeguarding the hazardous areas.

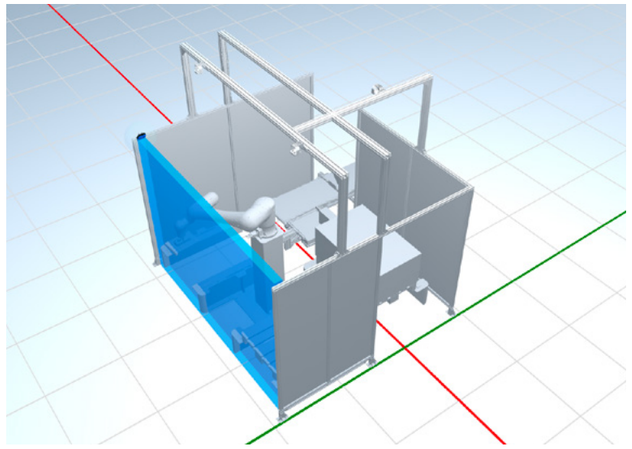

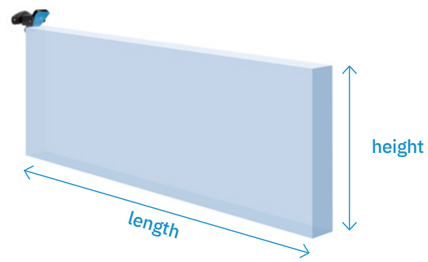

Easy to install
Configuration requires only 2 parameters:
HEIGHT and **LENGTH**

Installation height from 100 cm to 250 cm (from Reference Plane). Width: -10 cm, +10 cm (fixed). Max length: up to 4 m.

Part No. **90307014.1A0**

4m Range sensor | **1.6** m/s Max target speed | **90°** Max vertical plane | **EASY** to install

Technical details

Frequency	Millimeter waves V-band: 60 GHz
Connectors	Two 5-pin M12 connectors (1 male and 1 female)
CAN bus termination resistance	120 Ω (not supplied, to be installed with termination connector)
Power supply	12 V dc ± 20%, through control unit
Power consumption	2.6 W
Degree of protection	IP67
Operating temperature	From -30 to +60 °C (-22 to +140 °F)
Case material	Sensor: PA66 (front) + Aluminum (back) | Bracket: PA66 and glass fiber (GF)

Inxpect product catalogue v3.8 - Copyright © 2026 Inxpect S.p.A. - All rights reserved. - inxpect.com - safety@inxpect.com - Designed and manufactured in Italy by Inxpect.
"Inxpect" and its logo are registered trademarks of Inxpect S.p.A. - Technical specifications subject to change without notice. - All pictures shown are for illustration purposes only.

S202A-MC2

Scan the QR Code to open the Regulatory Notice Page

200 SERIES *Omni Line*

2 CUBOIDS

Safety Parameters:

- SIL2 (IEC 61508)
- PLd, Cat. 3 (ISO 13849)
- Performance Class D (IEC/ TS 62998-1)

Inxpect product catalogue v3.8 - Copyright © 2026 Inxpect S.p.A. - All rights reserved. - inxpect.com - safety@inxpect.com - Designed and manufactured in Italy by Inxpect.
"Inxpect" and its logo are registered trademarks of Inxpect S.p.A. - Technical specifications subject to change without notice. - All pictures shown are for illustration purposes only.

S202A-MC2

2 Cuboids

The **NEW S202A-MC2** sensor is highly configurable and designed to cover a wide range of applications. Ensuring maximum productivity and operator safety for your system has never been easier. Try it out!

Configure up to 2 cuboids

Freely adjustable shapes:
create up to 2 cuboids that best suit your application. S202A-MC2 (2 cuboids)

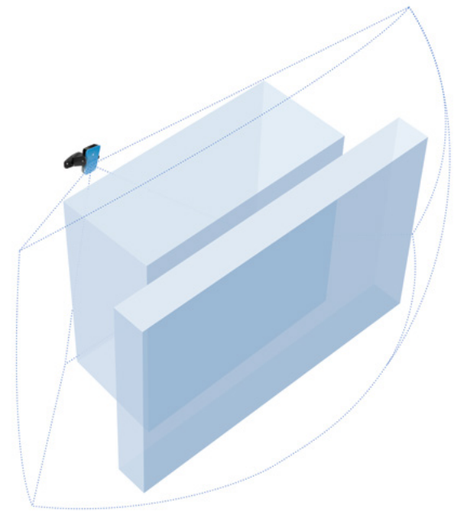

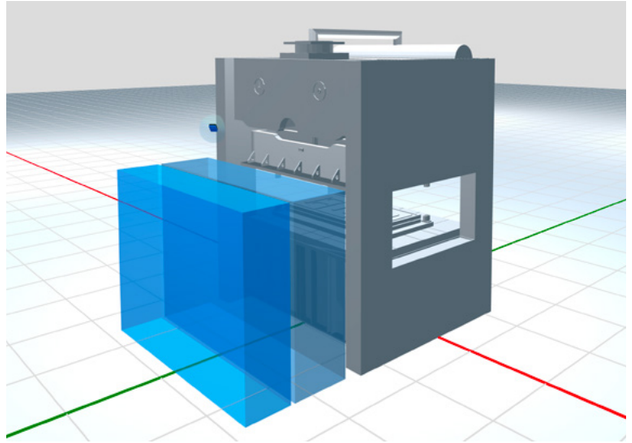

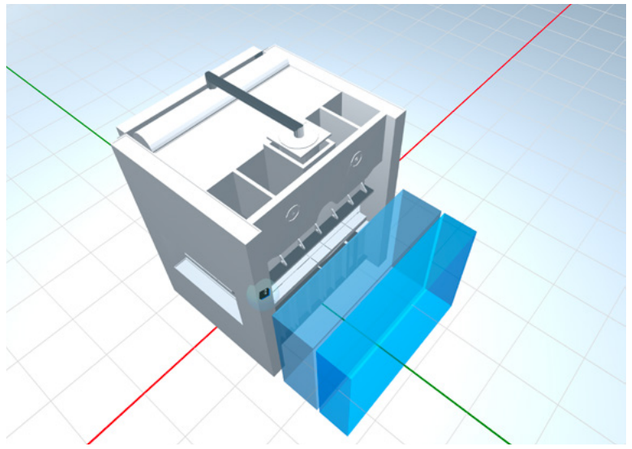

Minimum cuboid dimensions: 50 x 50 x 100 cm (h). Max length: up to 5 m.
As an alternative to the cuboid shape, you can also choose the Classic or Corridor shape.

Part No. **90307012.1A2**

5m Range sensor | **1.6 m/s** Max target speed | **90°** Max vertical plane | **2** Max cuboids

Technical details

Frequency	Millimeter waves V-band: 60 GHz
Connectors	Two 5-pin M12 connectors (1 male and 1 female)
CAN bus termination resistance	120 Ω (not supplied, to be installed with termination connector)
Power supply	12 V dc ± 20%, through control unit
Power consumption	2.6 W
Degree of protection	IP67
Operating temperature	From -30 to +60 °C (-22 to +140 °F)
Case material	Sensor: PA66 (front) + Aluminum (back) | Bracket: PA66 and glass fiber (GF)

3-axis bracket:
the sensor can rotate on three axis (x, y, z).

Inxpect product catalogue v3.8 - Copyright © 2026 Inxpect S.p.A. - All rights reserved. - inxpect.com - safety@inxpect.com - Designed and manufactured in Italy by Inxpect.
"Inxpect" and its logo are registered trademarks of Inxpect S.p.A. - Technical specifications subject to change without notice. - All pictures shown are for illustration purposes only.

S202A-MC4

Scan the QR Code to open the Regulatory Notice Page

200 SERIES *Omni Line*

4 CUBOIDS

Safety Parameters:

- SIL2 (IEC 61508)
- PLd, Cat. 3 (ISO 13849)
- Performance Class D (IEC/ TS 62998-1)

Inxpect product catalogue v3.8 - Copyright © 2026 Inxpect S.p.A. - All rights reserved. - inxpect.com - safety@inxpect.com - Designed and manufactured in Italy by Inxpect.
"Inxpect" and its logo are registered trademarks of Inxpect S.p.A. - Technical specifications subject to change without notice. - All pictures shown are for illustration purposes only.

S202A-MC4

4 Cuboids

The **NEW S202A-MC4** sensor is highly configurable and designed to cover a wide range of applications. Ensuring maximum productivity and operator safety for your system has never been easier. Try it out!

Configure up to 4 cuboids

Freely adjustable shapes:
create up to 4 cuboids that best suit your application. S202A-MC4 (4 cuboids)

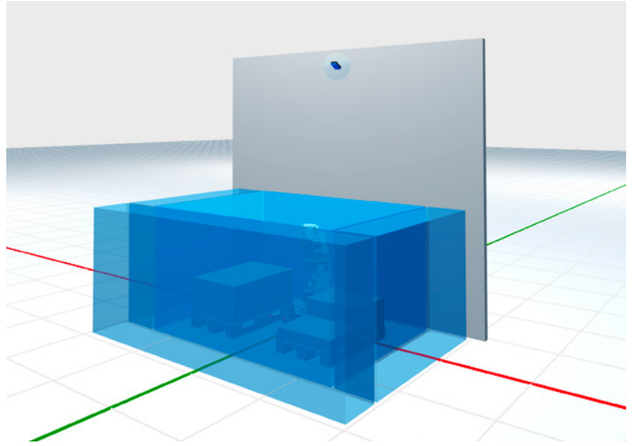

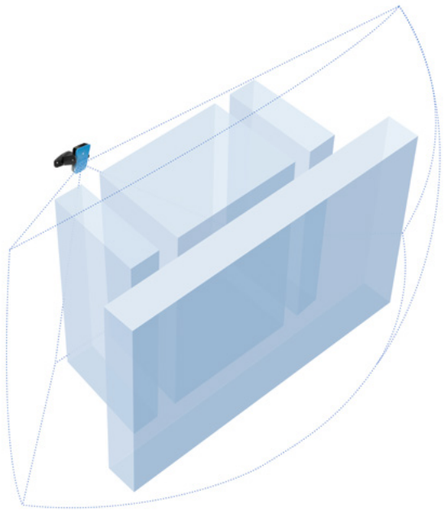

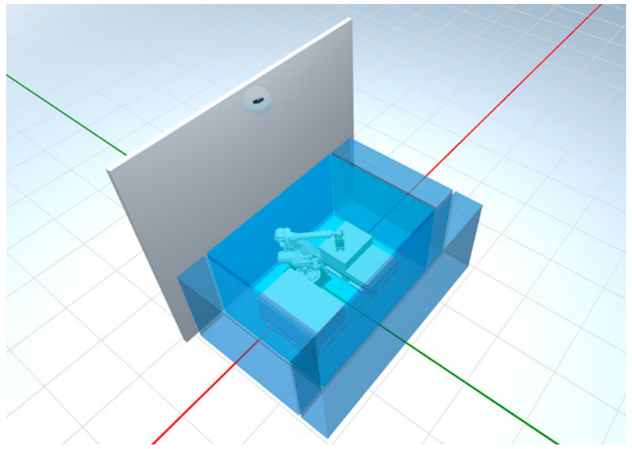

Minimum cuboid dimensions: 50 x 50 x 100 cm (h). Max length: up to 5 m.
As an alternative to the cuboid shape, you can also choose the Classic or Corridor shape.

Part No. **90307012.1A0**

5m Range sensor | **1.6 m/s** Max target speed | **90°** Max vertical plane | **4** Max cuboids

Technical details

Frequency	Millimeter waves V-band: 60 GHz
Connectors	Two 5-pin M12 connectors (1 male and 1 female)
CAN bus termination resistance	120 Ω (not supplied, to be installed with termination connector)
Power supply	12 V dc ± 20%, through control unit
Power consumption	2.6 W
Degree of protection	IP67
Operating temperature	From -30 to +60 °C (-22 to +140 °F)
Case material	Sensor: PA66 (front) + Aluminum (back) | Bracket: PA66 and glass fiber (GF)

3-axis bracket:
the sensor can rotate on three axis (x, y, z).

Inxpect product catalogue v3.8 - Copyright © 2026 Inxpect S.p.A. - All rights reserved. - inxpect.com - safety@inxpect.com - Designed and manufactured in Italy by Inxpect.
"Inxpect" and its logo are registered trademarks of Inxpect S.p.A. - Technical specifications subject to change without notice. - All pictures shown are for illustration purposes only.

S201A-WL

Scan the QR Code to open the Regulatory Notice Page

UK CA

RoHS 2002/95/EC

certified by TÜV SÜD

SIL2 PLd CERTIFIED

UL CERTIFIED

200 SERIES 9 M *Pro Line 9m*

CORRIDOR FOV, 9M

Safety Parameters:

- SIL2 (IEC 61508)
- PLd, Cat. 3 (ISO 13849)
- Performance Class D (IEC/TS 62998-1)

Inxpect product catalogue v3.8 - Copyright © 2026 Inxpect S.p.A. - All rights reserved. - inxpect.com - safety@inxpect.com - Designed and manufactured in Italy by Inxpect.
"Inxpect" and its logo are registered trademarks of Inxpect S.p.A. - Technical specifications subject to change without notice. - All pictures shown are for illustration purposes only.

S201A-WL

Corridor FOV, 9m

The **S201A-WL** sensor, in addition to the advanced field of view (symmetrical, asymmetrical or corridor FOV), also supports higher speeds (4m/s) and longer ranges (9 meters) than the base S201A-W model. The **S201A-WL** is therefore ideal in sectors like earth moving, railway, mining and agriculture.

The sensors perform the following primary functions:

- **Motion and scenario analysis.**
- **Communication to the control unit of processed motion data and diagnostic information.**
- **The RCS of the target can be selected for human safety or collision with other object. The custom target detection is a safety function that allows detecting the access of one or more objects with specific RCS values.**

Four independent detection fields with freely adjustable angles (see below) and a maximum total distance of 9 m.

Classic FOV $\alpha = \beta$ or $\alpha \neq \beta$

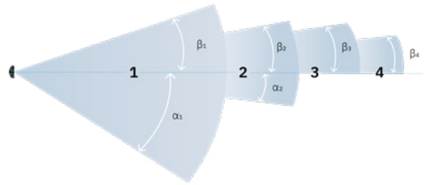

The aperture of each field is dynamically adjustable in 5° increments over a range of 10° to 100° (0-5 m) and over a range of 10° to 40° (5-9 m).

Corridor FOV $L = R$ or $L \neq R$

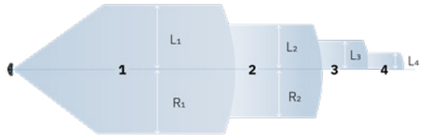

Field of view

0 - 5 m [min. set distance: 0.2 m]
Horizontal Plane: 10-100°
Vertical Plane: 20°

5 - 9 m
Horizontal Plane: 10-40°
Vertical Plane: 20°

Classic FOV (with symmetrical or asymmetrical shape)
[0-5 m] α: 0°-50° β: 0°-50°
[5-9 m] α: 0°-20° β: 0°-20°

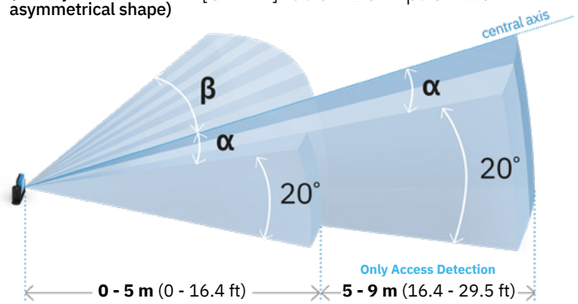

Corridor FOV (with symmetrical or asymmetrical shape)
[0-5 m] L + R ≥ 20 cm
[5-9 m] L + R ≥ 30 cm

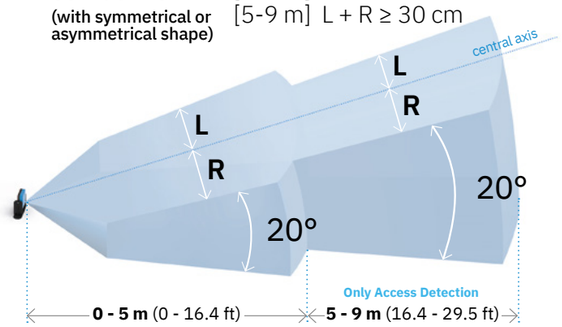

Part No. **90305111**

9m Range sensor | **4s** Restart timeout | **4 m/s** Max target speed | **20°** Vertical plane | **RCS** Selectable

Technical details

Frequency	Millimeter waves V-band: 60 GHz
Connectors	Two 5-pin M12 connectors (1 male and 1 female)
CAN bus termination resistance	120 Ω (not supplied, to be installed with termination connector)
Power supply	12 V dc ± 20%, through control unit
Power consumption	2.2 W
Degree of protection	IP67
Operating temperature	From -30 to +60 °C (-22 to +140 °F)
Case material	Sensor: PA66 (front) + Aluminum (back) | Bracket: PA66 and glass fiber (GF)

3-axis bracket: the sensor can rotate on three axis (x, y, z).

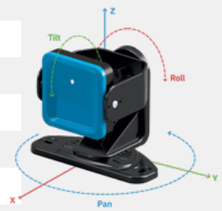

Inxpect product catalogue v3.8 - Copyright © 2026 Inxpect S.p.A. - All rights reserved. - inxpect.com - safety@inxpect.com - Designed and manufactured in Italy by Inxpect.
"Inxpect" and its logo are registered trademarks of Inxpect S.p.A. - Technical specifications subject to change without notice. - All pictures shown are for illustration purposes only.

S203A-WL

Scan the QR Code to open the Regulatory Notice Page

UK CA

RoHS 2002/95/EC

TÜV SÜD

SIL2 PLd CERTIFIED

UL CERTIFIED

200 SERIES 9 M *Pro Line 9m*

VERTICAL FOV 12°, 9M

Safety Parameters:

- SIL2 (IEC 61508)
- PLd, Cat. 3 (ISO 13849)
- Performance Class D (IEC/TS 62998-1)

Inxpect product catalogue v3.8 - Copyright © 2026 Inxpect S.p.A. - All rights reserved. - inxpect.com - safety@inxpect.com - Designed and manufactured in Italy by Inxpect.
"Inxpect" and its logo are registered trademarks of Inxpect S.p.A. - Technical specifications subject to change without notice. - All pictures shown are for illustration purposes only.

S203A-WL

Vertical FOV 12°, 9m

The **S203A-WL** sensor, in addition to the advanced field of view equipped with a vertical angular coverage of 12°, also supports higher speeds (4m/s) and longer ranges (9 meters) than the base S203A-W model. The **S203A-WL** is therefore ideal in sectors like earth moving, railway, mining and agriculture.

The sensors perform the following primary functions:

- **Motion and scenario analysis.**
- **Communication to the control unit of processed motion data and diagnostic information.**
- **The RCS of the target can be selected for human safety or collision with other object. The custom target detection is a safety function that allows detecting the access of one or more objects with specific RCS values.**

Four independent detection fields with freely adjustable angles (see below) and a maximum total distance of 9 m.

Classic FOV $\alpha = \beta$ or $\alpha \neq \beta$

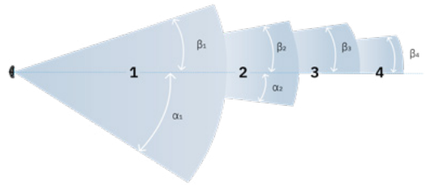

The aperture of each field is dynamically adjustable in 5° increments over a range of 10° to 100° (0-5 m) and over a range of 10° to 40° (5-9 m).

Corridor FOV $L = R$ or $L \neq R$

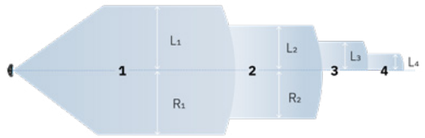

Field of view

0 - 5 m [min. set distance: 0.2 m]
Horizontal Plane: 10-100°
Vertical Plane: 12°

5 - 9 m
Horizontal Plane: 10-40°
Vertical Plane: 12°

Classic FOV (with symmetrical or asymmetrical shape)
[0-5 m] α: 0°-50° β: 0°-50°
[5-9 m] α: 0°-20° β: 0°-20°

Corridor FOV (with symmetrical or asymmetrical shape)
[0-5 m] L + R ≥ 20 cm
[5-9 m] L + R ≥ 30 cm

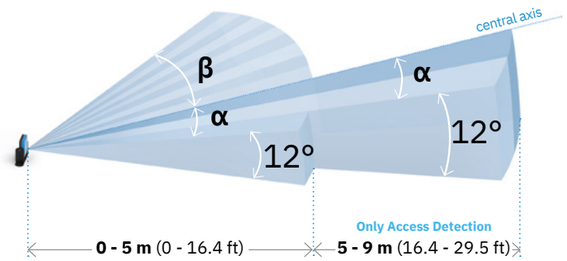

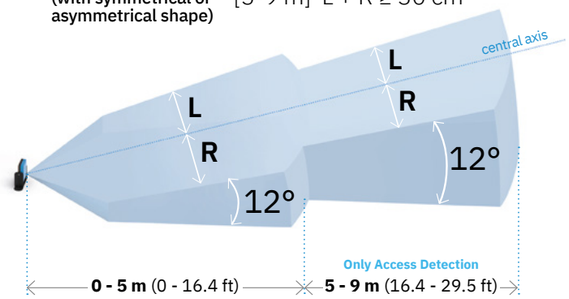

Part No. **90306111**

9m Range sensor | **4s** Restart timeout | **4 m/s** Max target speed | **12°** Vertical plane | **RCS** Selectable

Technical details

Frequency	Millimeter waves V-band: 60 GHz
Connectors	Two 5-pin M12 connectors (1 male and 1 female)
CAN bus termination resistance	120 Ω (not supplied, to be installed with termination connector)
Power supply	12 V dc ± 20%, through control unit
Power consumption	2.2 W
Degree of protection	IP67
Operating temperature	From -30 to +60 °C (-22 to +140 °F)
Case material	Sensor: PA66 (front) + Aluminum (back) | Bracket: PA66 and glass fiber (GF)

3-axis bracket:
the sensor can rotate on three axis (x, y, z).

Inxpect product catalogue v3.8 - Copyright © 2026 Inxpect S.p.A. - All rights reserved. - inxpect.com - safety@inxpect.com - Designed and manufactured in Italy by Inxpect.
"Inxpect" and its logo are registered trademarks of Inxpect S.p.A. - Technical specifications subject to change without notice. - All pictures shown are for illustration purposes only.

S203A-WLT

Scan the QR Code to open the Regulatory Notice Page

200 SERIES 9 M *Pro Line 9m*

VERTICAL FOV 12°, 9M WITH THE TEACH-IN FUNCTION

Safety Parameters:

- SIL2 (IEC 61508)
- PLd, Cat. 3 (ISO 13849)
- Performance Class D (IEC/TS 62998-1)

Inxpect product catalogue v3.8 - Copyright © 2026 Inxpect S.p.A. - All rights reserved. - inxpect.com - safety@inxpect.com - Designed and manufactured in Italy by Inxpect.
"Inxpect" and its logo are registered trademarks of Inxpect S.p.A. - Technical specifications subject to change without notice. - All pictures shown are for illustration purposes only.

S203A-WLT

Vertical FOV 12°, 9m with Teach-In function

The **S203A-WLT** sensor, in addition to the advanced field of view with a vertical angular coverage of 12°, also supports higher speeds (4m/s) and longer ranges (9 meters) compared to the base S203A-WT model.

With the Teach-In function, the sensor sets the range of the last detection field according to the distance of the nearest static target detected inside a predetermined volume called "learning area".

Teach-in function

Once the field of view of each sensor has been set, the environment may change due to industrial processes or operational activities. In such cases, the sensors can be affected by the new environmental conditions, potentially generating undesired alarms or leaving areas unprotected by the radar system. The Teach-in function addresses this issue: when enabled via an input, all sensors switch to the "learning phase," allowing them to adapt to the updated environment.

Once activated, the Teach-In learning process begins. All sensors switch to the learning phase, so they detect the nearest target in the area.

At the end of the learning phase, the sensors are updated with the new detection distances, allowing the operator to continue working safely.

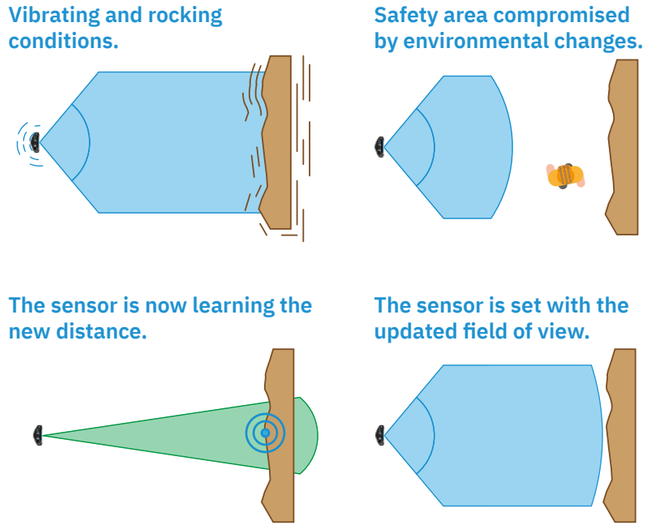

TEACH-IN
ADAPTIVE SAFETY ON DEMAND

Part No. **90306111.5A1**

9m Range sensor | **4s** Restart timeout | **4 m/s** Max target speed | **12°** Vertical plane | **RCS** Selectable | **Teach-In function**

Technical details

Frequency	Millimeter waves V-band: 60 GHz
Connectors	Two 5-pin M12 connectors (1 male and 1 female)
CAN bus termination resistance	120 Ω (not supplied, to be installed with termination connector)
Power supply	12 V dc ± 20%, through control unit
Power consumption	2.2 W
Degree of protection	IP67
Operating temperature	From -30 to +60 °C (-22 to +140 °F)
Case material	Sensor: PA66 (front) + Aluminum (back) | Bracket: PA66 and glass fiber (GF)

3-axis bracket:
the sensor can rotate on three axis (x, y, z).

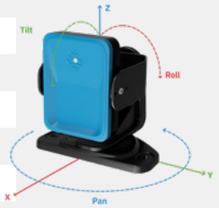

Inxpect product catalogue v3.8 - Copyright © 2026 Inxpect S.p.A. - All rights reserved. - inxpect.com - safety@inxpect.com - Designed and manufactured in Italy by Inxpect.
"Inxpect" and its logo are registered trademarks of Inxpect S.p.A. - Technical specifications subject to change without notice. - All pictures shown are for illustration purposes only.

CONTROL UNITS

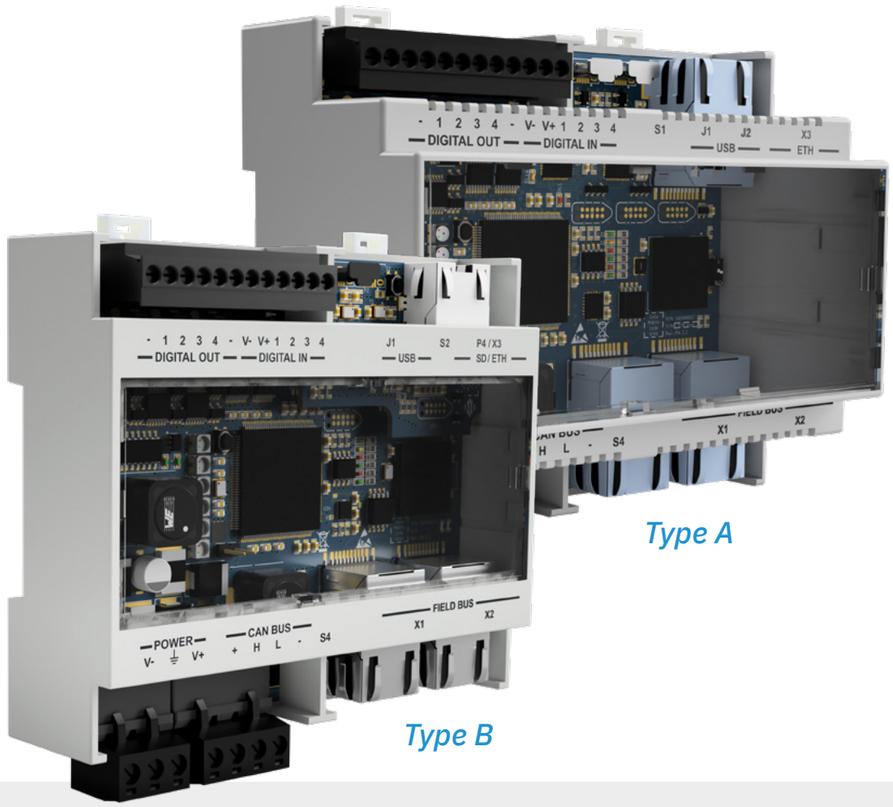

Which control unit fits my needs?

Inxpect product catalogue v3.8 - Copyright © 2026 Inxpect S.p.A. - All rights reserved. - inxpect.com - safety@inxpect.com - Designed and manufactured in Italy by Inxpect.
"Inxpect" and its logo are registered trademarks of Inxpect S.p.A. - Technical specifications subject to change without notice. - All pictures shown are for illustration purposes only.

CONTROL UNITS

Technical specifications

IEC TS 61496-5 certified · UL CERTIFIED · SIL2 PLd CERTIFIED

Digital IN/OUT — FOR ALL VERSIONS

SD card slot for backup and restore — ONLY TYPE B VERSION

Low profile — ONLY TYPE B VERSION

TYPE A	C201A		C202A	C203A
Connection	PROFIsafe+MODBUS	FSoE+MODBUS	MODBUS	-
Configuration	Ethernet + USB	Ethernet + USB	Ethernet + USB	USB
Dynamic setting of detection fields	Up to 32 dynamic configurations	Up to 32 dynamic configurations	Up to 8 dynamic configurations	Up to 8 dynamic configurations

TYPE B SD card slot for backup and restore	C201B			C202B	C203B
Connection	PROFIsafe+ MODBUS	FSoE+ MODBUS	CIP Safety™+ MODBUS	MODBUS	-
Configuration	Ethernet+USB	Ethernet+USB	Ethernet+USB	Ethernet+USB	USB
Dynamic setting of detection fields	Up to 32 dynamic configurations	Up to 32 dynamic configurations	Up to 32 dynamic configurations	Up to 8 dynamic configurations	Up to 8 dynamic configurations

Inxpect product catalogue v3.8 - Copyright © 2026 Inxpect S.p.A. - All rights reserved. - inxpect.com - safety@inxpect.com - Designed and manufactured in Italy by Inxpect.
"Inxpect" and its logo are registered trademarks of Inxpect S.p.A. - Technical specifications subject to change without notice. - All pictures shown are for illustration purposes only.

C201 PROFIsafe

Scan the QR Code to open the Regulatory Notice Page

Control Unit 200 SERIES

PROFIsafe, Ethernet and digital I/O

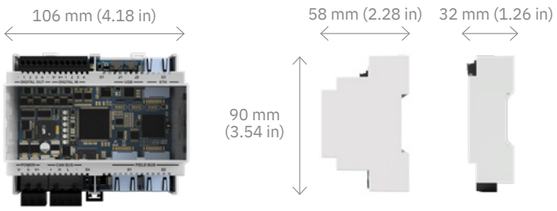

Safety Parameters:

- SIL2 (IEC 61508)
- PLd, Cat. 3 (ISO 13849)
- Performance Class D (IEC/TS 62998-1)

Inxpect product catalogue v3.8 - Copyright © 2026 Inxpect S.p.A. - All rights reserved. - inxpect.com - safety@inxpect.com - Designed and manufactured in Italy by Inxpect.
"Inxpect" and its logo are registered trademarks of Inxpect S.p.A. - Technical specifications subject to change without notice. - All pictures shown are for illustration purposes only.

C201A | C201B

PROFIsafe, Ethernet and digital I/O

C201 is the most advanced control unit for Inxpect safety radars, with the widest range of communication options. The Inxpect Safety Application allows the configuration of sensitivity levels, safety functions, size of detection fields, and the functionality of the I/O ports of the control unit.

Safety fieldbus
Currently supporting PROFIsafe fieldbus protocol.

Secure Ethernet
Remote configuration and management protected by industry standard cyber security protocols.

USB
Local configuration option.

Digital inputs
The system has two TYPE3 dual channel inputs. Alternatively, the four channels can be used as single channel digital inputs (category 2). Supporting the following functions:

- muting signal
- emergency stop signal
- restart signal

Four Output Signal Switching Devices
As safety outputs: two dual-channel safety OSSDs.
As auxiliary outputs: four auxiliary outputs, which can be configured as signal restart feedback, fault, muting status.

Dynamic setting of detection fields
The PROFIsafe connection allows to have up to 32 configurations switchable in real time.

SD backup, SD restore
Configurations and login credentials can be saved and restored via microSD card (only for C201B).

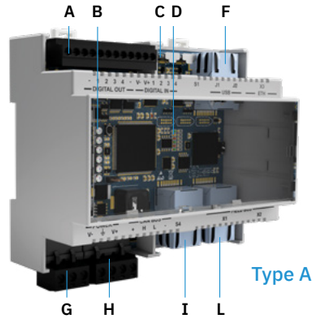

Type A

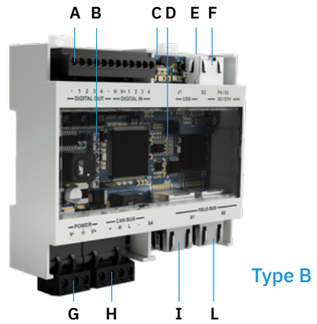

Type B

- **A** - I/O terminal block
- **B** - System status LED
- **C** - Micro USB port
- **D** - Fieldbus status LED
- **E** - SD card (only for C201B)
- **F** - Ethernet port
- **G** - Power supply terminal block
- **H** - CAN bus terminal block for connecting the first sensor
- **I** - Ethernet Fieldbus port n.1
- **L** - Ethernet Fieldbus port n.2

Technical details

SD Card slot for backup and restore

PROFIsafe and MODBUS

Type A

C201A-PX1 [eXtended Line]
Part No. **90301011.2B0**

Type B

C201B-PX1 [eXtended Line]
Part No. **90301111.2B0**

Outputs	4 Outputs Signal Switching Devices (OSSDs) or 2 dual channel safety outputs
Safety outputs	High-side outputs (with extended protection function) Max voltage: 30 V dc | Max current: 0.4 A | Max power: 12 W
Inputs	2 dual channel TYPE3 digital inputs with common GND 4 single channel TYPE3 digital inputs with common GND
Fieldbus interface	Ethernet based safety fieldbus (PROFIsafe)
MODBUS interface	Ethernet interface for real time data monitoring
Power supply	24 V dc (20–28 V dc) Max current: 1 A (no OSSD)
Max power consumption	5 W (no OSSD)
Assembly	DIN guide
Degree of protection	IP20
Terminals	Section: 1 mm2 | Max Current: 4 A with 1 mm2 cables
System configuration	Ethernet, USB

Inxpect product catalogue v3.8 - Copyright © 2026 Inxpect S.p.A. - All rights reserved. - inxpect.com - safety@inxpect.com - Designed and manufactured in Italy by Inxpect.
"Inxpect" and its logo are registered trademarks of Inxpect S.p.A. - Technical specifications subject to change without notice. - All pictures shown are for illustration purposes only.

C201 FSoE

Scan the QR Code to open the Regulatory Notice Page

Control Unit 200 SERIES

FSoE, Ethernet and digital I/O

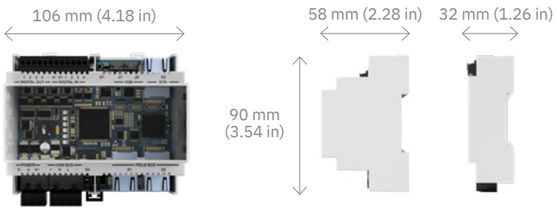

Safety Parameters:

- SIL2 (IEC 61508)
- PLd, Cat. 3 (ISO 13849)
- Performance Class D (IEC/TS 62998-1)

Inxpect product catalogue v3.8 - Copyright © 2026 Inxpect S.p.A. - All rights reserved. - inxpect.com - safety@inxpect.com - Designed and manufactured in Italy by Inxpect.
"Inxpect" and its logo are registered trademarks of Inxpect S.p.A. - Technical specifications subject to change without notice. - All pictures shown are for illustration purposes only.

C201A | C201B

FSoE, Ethernet and digital I/O

C201 is the most advanced control unit for Inxpect safety radars, with the widest range of communication options. The Inxpect Safety Application allows the configuration of sensitivity levels, safety functions, size of detection fields, and the functionality of the I/O ports of the control unit.

Safety fieldbus
Currently supporting Safety over EtherCAT® (FSoE) fieldbus protocol.

Secure Ethernet
Remote configuration and management protected by industry standard cyber security protocols.

USB
Local configuration option.

Digital inputs
The system has two TYPE3 dual channel inputs. Alternatively, the four channels can be used as single channel digital inputs (category 2). Supporting the following functions:

- muting signal
- emergency stop signal
- restart signal

Four Output Signal Switching Devices
As safety outputs: two dual-channel safety OSSDs.
As auxiliary outputs: four auxiliary outputs, which can be configured as signal restart feedback, fault, muting status.

Dynamic setting of detection fields
The FSoE connection allows to have up to 32 configurations switchable in real time.

SD backup, SD restore
Configurations and login credentials can be saved and restored via microSD card (only for C201B).

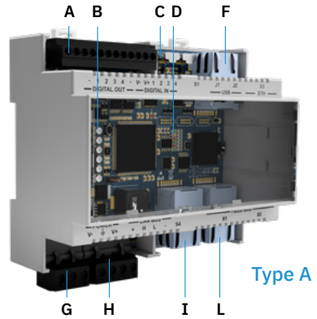

Type A

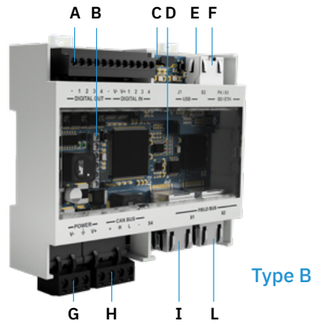

Type B

- **A** - I/O terminal block
- **B** - System status LED
- **C** - Micro USB port
- **D** - Fieldbus status LED
- **E** - SD card (only for **C201B**)
- **F** - Ethernet port
- **G** - Power supply terminal block
- **H** - CAN bus terminal block for connecting the first sensor
- **I** - Ethernet Fieldbus port n.1
- **L** - Ethernet Fieldbus port n.2

Technical details

SD Card slot for backup and restore

FSoE and MODBUS

Type A

C201A-FX1 [eXtended Line]
Part No. **90301012.2B0**

Type B

C201B-FX1 [eXtended Line]
Part No. **90301112.2B0**

Outputs	4 Outputs Signal Switching Devices (OSSDs) or 2 dual channel safety outputs
Safety outputs	High-side outputs (with extended protection function) Max voltage: 30 V dc | Max current: 0.4 A | Max power: 12 W
Inputs	2 dual channel TYPE3 digital inputs with common GND 4 single channel TYPE3 digital inputs with common GND
Fieldbus interface	Ethernet based safety fieldbus (Safety over EtherCAT® FSoE)
MODBUS interface	Ethernet interface for real time data monitoring
Power supply	24 V dc (20–28 V dc) Max current: 1 A (no OSSD)
Max power consumption	5 W (no OSSD)
Assembly	DIN guide
Degree of protection	IP20
Terminals	Section: 1 mm2 | Max Current: 4 A with 1 mm2 cables
System configuration	Ethernet, USB

Inxpect product catalogue v3.8 - Copyright © 2026 Inxpect S.p.A. - All rights reserved. - inxpect.com - safety@inxpect.com - Designed and manufactured in Italy by Inxpect.
"Inxpect" and its logo are registered trademarks of Inxpect S.p.A. - Technical specifications subject to change without notice. - All pictures shown are for illustration purposes only.

C201B CIP Safety™

Scan the QR Code to open the Regulatory Notice Page

Control Unit 200 SERIES

CIP Safety™, Ethernet and digital I/O

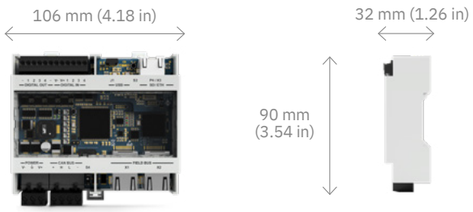

Safety Parameters:

- SIL2 (IEC 61508)
- PLd, Cat. 3 (ISO 13849)
- Performance Class D (IEC/TS 62998-1)

Inxpect product catalogue v3.8 - Copyright © 2026 Inxpect S.p.A. - All rights reserved. - inxpect.com - safety@inxpect.com - Designed and manufactured in Italy by Inxpect.
"Inxpect" and its logo are registered trademarks of Inxpect S.p.A. - Technical specifications subject to change without notice. - All pictures shown are for illustration purposes only.

C201B-C

CIP Safety™, Ethernet and digital I/O

C201B-C provides a safety communication based on CIP Safety™ on EtherNet/IP™. The Inxpect Safety Application allows the configuration of sensitivity levels, safety functions, size of detection fields, and the functionality of the I/O ports of the control unit.

Safety fieldbus
CIP Safety™ over EtherNet/IP™.

Secure Ethernet
Remote configuration and management protected by industry standard cyber security protocols.

USB
Local configuration option.

Digital inputs
The system has two TYPE3 dual channel inputs. Alternatively, the four channels can be used as single channel digital inputs (category 2). Supporting the following functions:

- muting signal
- emergency stop signal
- restart signal

Four Output Signal Switching Devices
As safety outputs: two dual-channel safety OSSDs.
As auxiliary outputs: four auxiliary outputs, which can be configured as signal restart feedback, fault, muting status.

Dynamic setting of detection fields
The connection allows to have up to 32 configurations switchable in real time.

SD backup, SD restore
Configurations and login credentials can be saved and restored via microSD card.

A - I/O terminal block
B - System status LED
C - Micro USB port
D - Fieldbus status LED
E - SD card
F - Ethernet port
G - Power supply terminal block
H - CAN bus terminal block for connecting the first sensor
I - Ethernet Fieldbus port n.1
L - Ethernet Fieldbus port n.2

Technical details

SD Card slot for backup and restore

CIP Safety™ and MODBUS

Type B

C201B-C [eXtended Line]
Part No. **90301113.210**

Outputs	4 Outputs Signal Switching Devices (OSSDs) or 2 dual channel safety outputs
Safety outputs	High-side outputs (with extended protection function) Max voltage: 30 V dc | Max current: 0.4 A | Max power: 12 W
Inputs	2 dual channel TYPE3 digital inputs with common GND 4 single channel TYPE3 digital inputs with common GND
Fieldbus interface	CIP SafetyTM over EtherNet/IPTM
MODBUS interface	Ethernet interface for real time data monitoring
Power supply	24 V dc (20–28 V dc) Max current: 1 A (no OSSD)
Max power consumption	5 W (no OSSD)
Assembly	DIN guide
Degree of protection	IP20
Terminals	Section: 1 mm2 | Max Current: 4 A with 1 mm2 cables
System configuration	Ethernet, USB

Inxpect product catalogue v3.8 - Copyright © 2026 Inxpect S.p.A. - All rights reserved. - inxpect.com - safety@inxpect.com - Designed and manufactured in Italy by Inxpect.
"Inxpect" and its logo are registered trademarks of Inxpect S.p.A. - Technical specifications subject to change without notice. - All pictures shown are for illustration purposes only.

C202 MODBUS

Scan the QR Code to open the Regulatory Notice Page

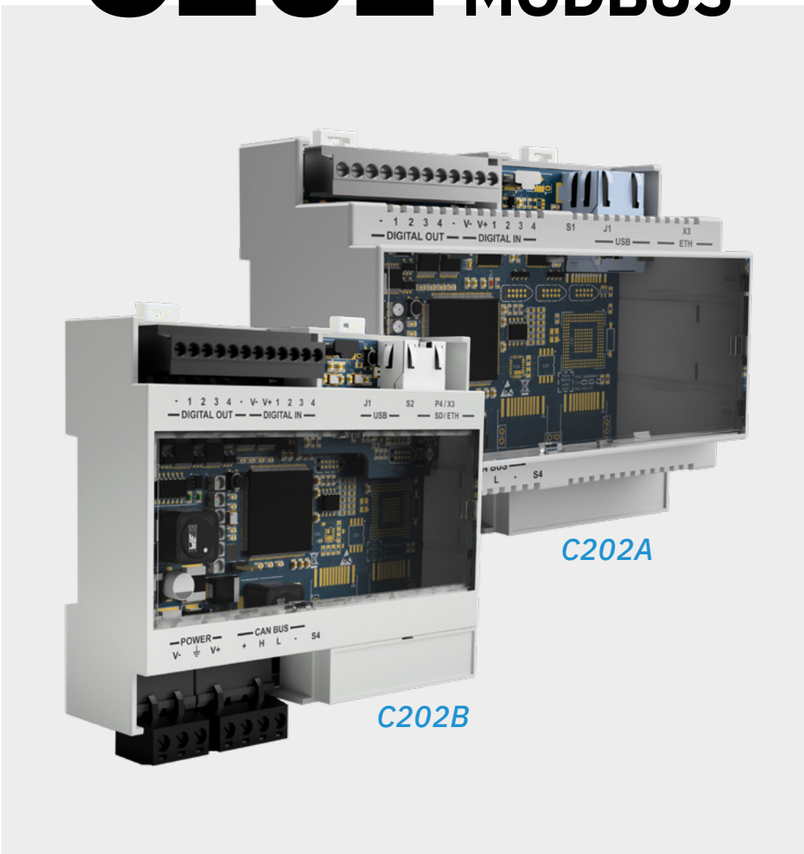

Control Unit 200 SERIES

Ethernet and digital I/O

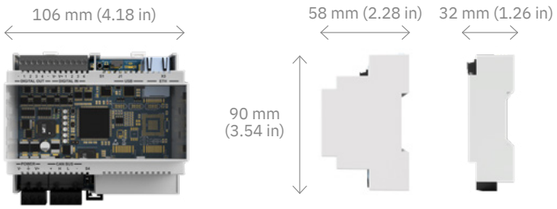

Safety Parameters:

- SIL2 (IEC 61508)
- PLd, Cat. 3 (ISO 13849)
- Performance Class D (IEC/TS 62998-1)

Inxpect product catalogue v3.8 - Copyright © 2026 Inxpect S.p.A. - All rights reserved. - inxpect.com - safety@inxpect.com - Designed and manufactured in Italy by Inxpect.
"Inxpect" and its logo are registered trademarks of Inxpect S.p.A. - Technical specifications subject to change without notice. - All pictures shown are for illustration purposes only.

C202A | C202B

Ethernet and digital I/O

C202 offers both USB and Ethernet communication interfaces, providing local and remote configuration options. In both cases, the Inxpect Safety Application allows the configuration of sensitivity levels, safety functions, size of detection fields, and the functionality of the I/O ports of the control unit.

Secure Ethernet
Remote configuration and management protected by industry standard cyber security protocols.

USB
Local configuration option.

Digital inputs
The system has two TYPE3 dual channel inputs. Alternatively, the four channels can be used as single channel digital inputs (category 2). Supporting the following functions

- muting signal
- emergency stop signal
- restart signal

Four Output Signal Switching Devices
As safety outputs: two dual-channel safety OSSDs.
As auxiliary outputs: four auxiliary outputs, which can be configured as signal restart feedback, fault, muting status.

Dynamic setting of detection fields
There are up to 8 configurations switchable in real time.

SD backup, SD restore
Configurations and login credentials can be saved and restored via microSD card (only for **C202B**).

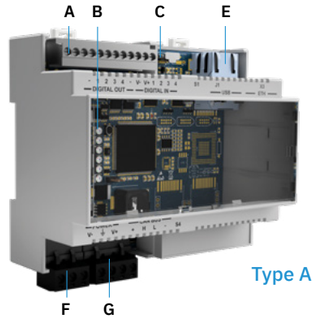

Type A

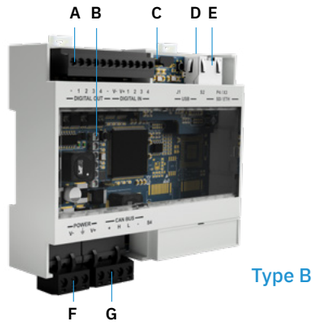

Type B

A - I/O terminal block
B - System status LED
C - Micro USB port
D - SD card (only for C202B)
E - Ethernet port
F - Power supply terminal block
G - CAN bus terminal block for connecting the first sensor

Technical details

SD Card slot for backup and restore

MODBUS

Type A

C202A-X1 [eXtended Line]
Part No. **90303011.2B0**

Type B

C202B-X1 [eXtended Line]
Part No. **90303111.2B0**

Outputs	4 Outputs Signal Switching Devices (OSSDs) or 2 dual channel safety outputs
Safety outputs	High-side outputs (with extended protection function) Max voltage: 30 V dc | Max current: 0.4 A | Max power: 12 W
Inputs	2 dual channel TYPE3 digital inputs with common GND 4 single channel TYPE3 digital inputs with common GND
MODBUS interface	Ethernet interface for real time data monitoring
Power supply	24 V dc (20–28 V dc) Max current: 1 A (no OSSD)
Max power consumption	5 W (no OSSD)
Assembly	DIN guide
Degree of protection	IP20
Terminals	Section: 1 mm^2 | Max Current: 4 A with 1 mm^2 cables
System configuration	Ethernet, USB

Inxpect product catalogue v3.8 - Copyright © 2026 Inxpect S.p.A. - All rights reserved. - inxpect.com - safety@inxpect.com - Designed and manufactured in Italy by Inxpect.
"Inxpect" and its logo are registered trademarks of Inxpect S.p.A. - Technical specifications subject to change without notice. - All pictures shown are for illustration purposes only.

C203 USB

Scan the QR Code to open the Regulatory Notice Page

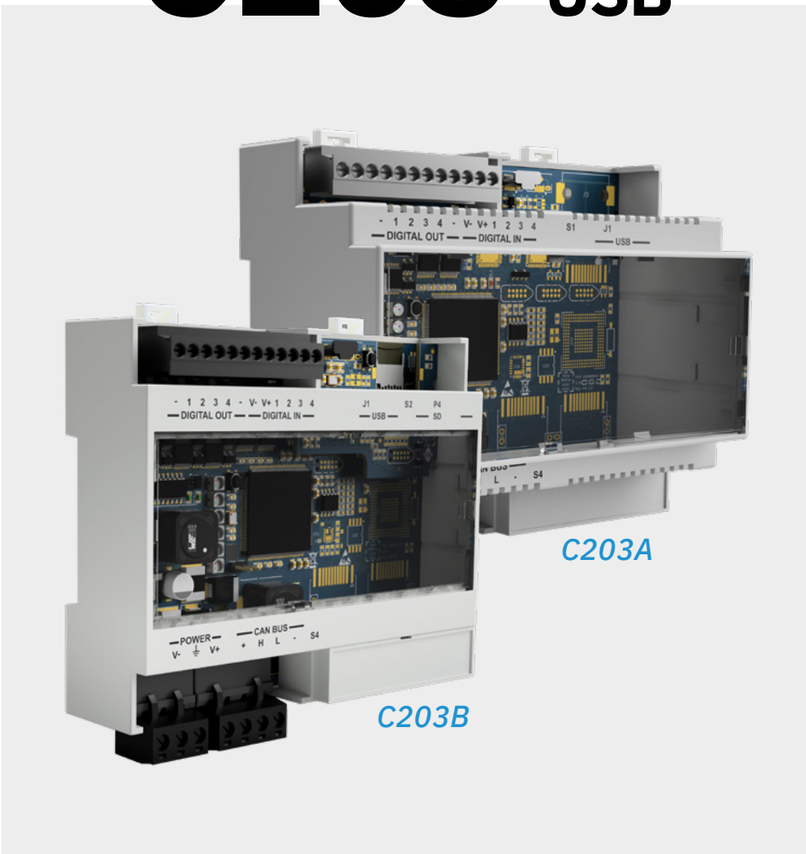

Control Unit 200 SERIES

Digital I/O

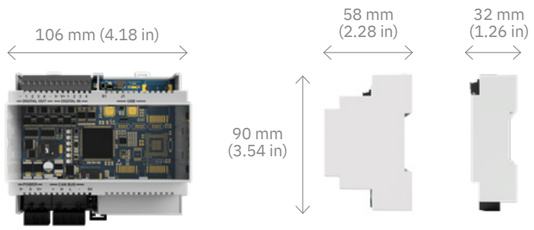

Safety Parameters:

- SIL2 (IEC 61508)
- PLd, Cat. 3 (ISO 13849)
- Performance Class D (IEC/TS 62998-1)

Inxpect product catalogue v3.8 - Copyright © 2026 Inxpect S.p.A. - All rights reserved. - inxpect.com - safety@inxpect.com - Designed and manufactured in Italy by Inxpect.
"Inxpect" and its logo are registered trademarks of Inxpect S.p.A. - Technical specifications subject to change without notice. - All pictures shown are for illustration purposes only.

C203A | C203B

Digital I/O

C203 provides basic but robust control functionality for any Inxpect safety radar sensor. The Inxpect Safety Application works via USB to configure the sensitivity levels, safety functions, size of detection fields, and the functionality of the I/O ports of the control unit.

USB
Local configuration option.

Digital inputs
The system has two TYPE3 dual channel inputs. Alternatively, the four channels can be used as single channel digital inputs (category 2). Supporting the following functions:

- muting signal
- emergency stop signal
- restart signal

Four Output Signal Switching Devices
As safety outputs: two dual-channel safety OSSDs.
As auxiliary outputs: four auxiliary outputs, which can be configured as signal restart feedback, fault, muting status.

Dynamic setting of detection fields
There are up to 8 configurations switchable in real time.

SD backup, SD restore
Configurations and login credentials can be saved and restored via microSD card (only for **C203B**).

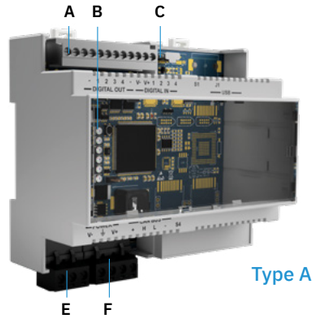

Type A

Type B

A - I/O terminal block
B - System status LED
C - Micro USB port
D - SD card (only for C203B)
E - Power supply terminal block
F - CAN bus terminal block for connecting the first sensor

SD
Card slot for backup and restore

Technical details

Type A

C203A-X1 [eXtended Line]
Part No. **90304011.2B0**

Type B

C203B-X1 [eXtended Line]
Part No. **90304111.2B0**

Outputs	4 Outputs Signal Switching Devices (OSSDs) or 2 dual channel safety outputs
Safety outputs	High-side outputs (with extended protection function) Max voltage: 30 V dc | Max current: 0.4 A | Max power: 12 W
Inputs	2 dual channel TYPE3 digital inputs with common GND 4 single channel TYPE3 digital inputs with common GND
Power supply	24 V dc (20–28 V dc) Max current: 1 A (no OSSD)
Max power consumption	5 W (no OSSD)
Assembly	DIN guide
Degree of protection	IP20
Terminals	Section: 1 mm² | Max Current: 4 A with 1 mm² cables
System configuration	USB

Inxpect product catalogue v3.8 - Copyright © 2026 Inxpect S.p.A. - All rights reserved. - inxpect.com - safety@inxpect.com - Designed and manufactured in Italy by Inxpect.
"Inxpect" and its logo are registered trademarks of Inxpect S.p.A. - Technical specifications subject to change without notice. - All pictures shown are for illustration purposes only.

RUGGEDIZED CONTROL UNITS

C202B-RA

C201B-RA-P/-F/-C

Which ruggedized control unit fits my needs?

Inxpect product catalogue v3.8 - Copyright © 2026 Inxpect S.p.A. - All rights reserved. - inxpect.com - safety@inxpect.com - Designed and manufactured in Italy by Inxpect.
"Inxpect" and its logo are registered trademarks of Inxpect S.p.A. - Technical specifications subject to change without notice. - All pictures shown are for illustration purposes only.

RUGGEDIZED CONTROL UNITS

Technical specifications

INDUSTRIAL CONNECTORS — Ethernet interface — I/O connector — Power IN/OUT

RUGGEDIZED CONTROL UNITS	C201B-RA-P	C201B-RA-F	C201B-RA-C	C202B-RA
Connection	PROFIsafe	FSoE	CIP Safety™	-
Configuration	Ethernet	Ethernet	Ethernet	Ethernet
Dynamic setting of detection fields	Up to 32 dynamic configurations	Up to 32 dynamic configurations	Up to 32 dynamic configurations	Up to 8 dynamic configurations

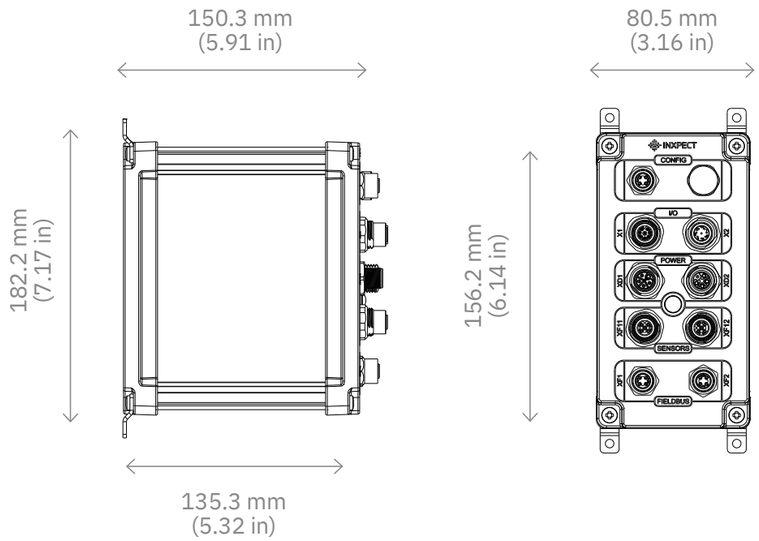

Scan the QR Code to open the Regulatory Notice Page

Certifications

UL CERTIFIED · SIL2 PLd CERTIFIED · Certified by TÜV SÜD · RoHS 2002/95/EC · UKCA

Inxpect product catalogue v3.8 - Copyright © 2026 Inxpect S.p.A. - All rights reserved. - inxpect.com - safety@inxpect.com - Designed and manufactured in Italy by Inxpect.
"Inxpect" and its logo are registered trademarks of Inxpect S.p.A. - Technical specifications subject to change without notice. - All pictures shown are for illustration purposes only.

UNMATCHED RELIABILITY AND DURABILITY

Discover the state-of-the-art ruggedized Inxpect control unit, designed to deliver exceptional performance even in the harshest conditions, making it the ideal choice for challenging environments and industrial applications.

IP67 protection

Key Features:

IP67 Certification: Maximum protection against dust and water.
Temperature range: [-30, +50]°

Resistance to vibrations in accordance with:

- **IEC 60068-2-64 Fh** (equipment in wheeled vehicles, Spectrum A.3)
- **IEC/EN 61496-1:2020** (ground vehicle installations, 5M3)
- **ISO 15003:2019** (agricultural machinery, L3)

Ideal Applications:

Heavy Industry: Perfect for environments with high levels of dust and humidity.
Agricultural Sector: Withstands weather conditions and soil environments.
Construction: Reliable on construction sites, resistant to dust and vibrations.

The system is equipped with a **Type B** Control Unit.

C201B-RA-F

FSoE, Ethernet & digital I/O

Part No. **90301B12.210**

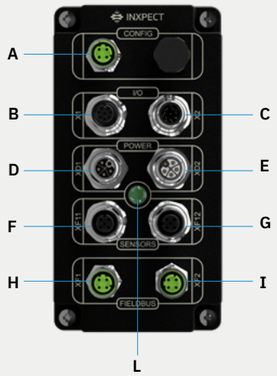

- **A** - Ethernet connector
- **B** - I/O connector (Output)
- **C** - I/O connector (Input)
- **D** - Power IN connector
- **E** - Power OUT connector
- **F** - Sensors connector
- **G** - Sensors connector
- **H** - Fieldbus connector
- **I** - Fieldbus connector
- **L** - Power status led

C201B-RA-C

CIP Safety™, Ethernet & digital I/O

Part No. **90301B13.210**

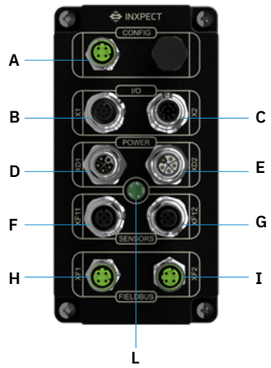

- **A** - Ethernet connector
- **B** - I/O connector (Output)
- **C** - I/O connector (Input)
- **D** - Power IN connector
- **E** - Power OUT connector
- **F** - Sensors connector
- **G** - Sensors connector
- **H** - Fieldbus connector
- **I** - Fieldbus connector
- **L** - Power status led

C201B-RA-P

PROFIsafe, Ethernet & digital I/O

Part No. **90301B11.210**

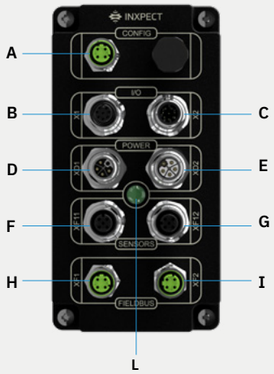

- **A** - Ethernet connector
- **B** - I/O connector (Output)
- **C** - I/O connector (Input)
- **D** - Power IN connector
- **E** - Power OUT connector
- **F** - Sensors connector
- **G** - Sensors connector
- **H** - Fieldbus connector
- **I** - Fieldbus connector
- **L** - Power status led

C202B-RA

Ethernet & digital I/O

Part No. **90303B11.210**

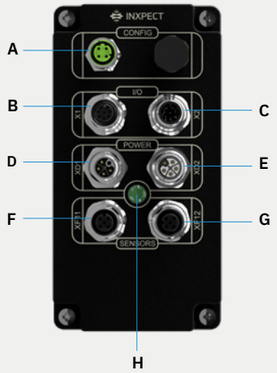

- **A** - Ethernet connector
- **B** - I/O connector (Output)
- **C** - I/O connector (Input)
- **D** - Power IN connector
- **E** - Power OUT connector
- **F** - Sensors connector
- **G** - Sensors connector
- **H** - Power status led

Inxpect product catalogue v3.8 - Copyright © 2026 Inxpect S.p.A. - All rights reserved. - inxpect.com - safety@inxpect.com - Designed and manufactured in Italy by Inxpect.
"Inxpect" and its logo are registered trademarks of Inxpect S.p.A. - Technical specifications subject to change without notice. - All pictures shown are for illustration purposes only.

Inxpect product catalogue v3.8 - Copyright © 2026 Inxpect S.p.A. - All rights reserved. - inxpect.com - safety@inxpect.com - Designed and manufactured in Italy by Inxpect.
"Inxpect" and its logo are registered trademarks of Inxpect S.p.A. - Technical specifications subject to change without notice. - All pictures shown are for illustration purposes only.

Accessories

INDOOR

Adjustable protector kit

for indoor and outdoor applications

These adjustable protector kits are used for installing Inxpect Safety Radar Sensors in harsh indoor and outdoor environments. The purpose of the support is to house the sensor at the desired height and protect it from the sides and from above.

INDOOR VERSION Part No. **90302ZAC**
30 degree slope downward
[RAL1003 powder coated metal]

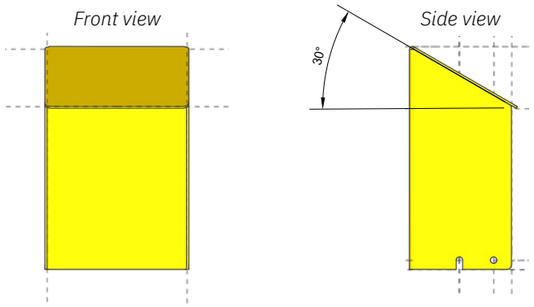

OUTDOOR

OUTDOOR VERSION Part No. **90302ZAD**
20 degree slope upward
[RAL1003 powder coated metal]

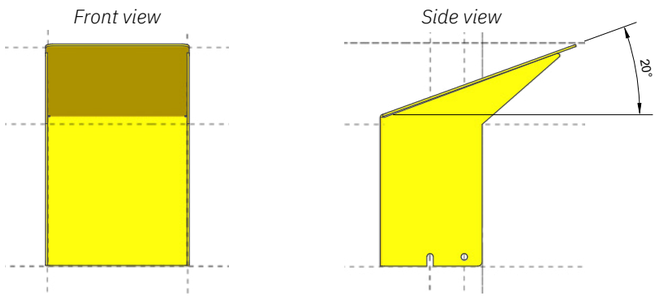

Metal protector

for Radar Sensor 100 SERIES

[AISI 304 Stainless steel]

Part No. **90202ZAA**

The metal protector ensures that Inxpect S101A sensors perform at their best even in the most challenging environmental conditions, increasing their immunity to spurious detections while reducing the possibility of damage caused by accidental impact.

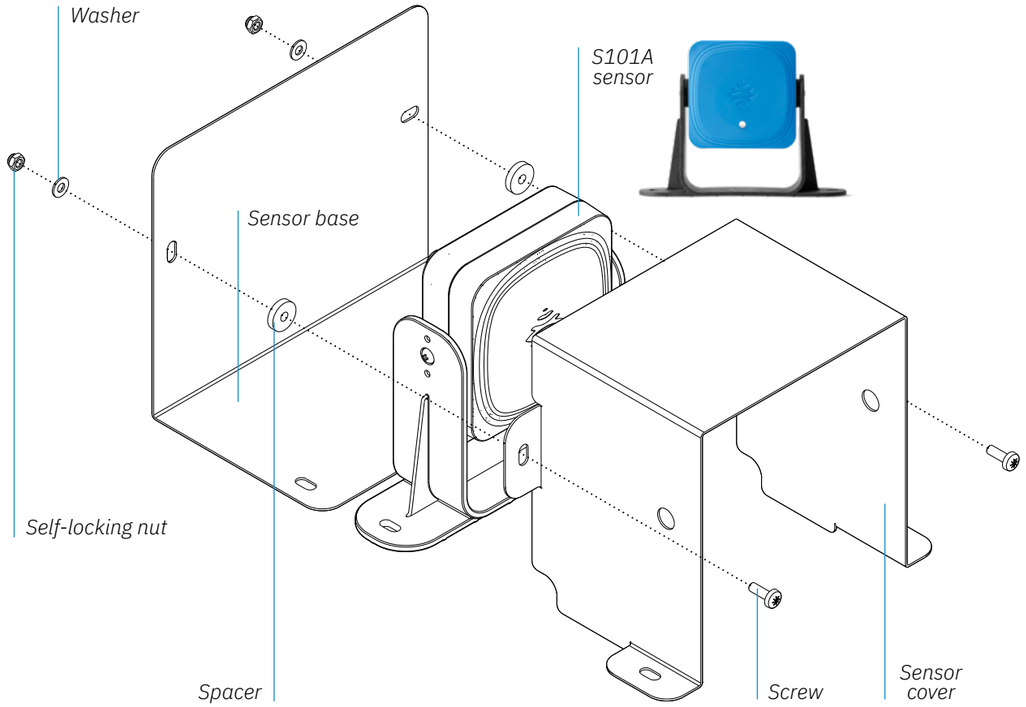

Inxpect product catalogue v3.8 - Copyright © 2026 Inxpect S.p.A. - All rights reserved. - inxpect.com - safety@inxpect.com - Designed and manufactured in Italy by Inxpect.
"Inxpect" and its logo are registered trademarks of Inxpect S.p.A. - Technical specifications subject to change without notice. - All pictures shown are for illustration purposes only.

Inxpect product catalogue v3.8 - Copyright © 2026 Inxpect S.p.A. - All rights reserved. - inxpect.com - safety@inxpect.com - Designed and manufactured in Italy by Inxpect.
"Inxpect" and its logo are registered trademarks of Inxpect S.p.A. - Technical specifications subject to change without notice. - All pictures shown are for illustration purposes only.

Accessories

2-AXIS

Metal Bracket

for Inxpect SRE 200 Series

Part No. **90302ZAH**

The Metal Bracket is designed to replace the original plastic bracket of the 200 Series sensors, making it suitable for use in harsh indoor and outdoor environments.

It allows the sensor to be replaced without affecting the pre-defined inclination angle, preventing incorrect settings and ensuring more precise configuration.

The Metal Bracket is manufactured from AISI 304 stainless steel and weighs 473 g (1.04 lbs) for 2-axis version and 674 g (1.48 lbs) for 3-axis version.

with Inxpect S201A

Front view *Side views*

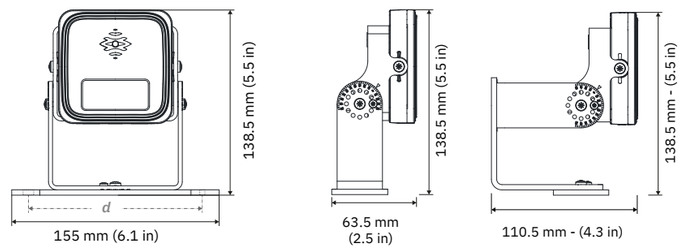

d (center-to-center distance) = 130 mm (5.1 in)
slotted hole Ø = 5.2 mm (0.20 in)

3-AXIS

with Inxpect S202A/S203A

Front view *Side views*

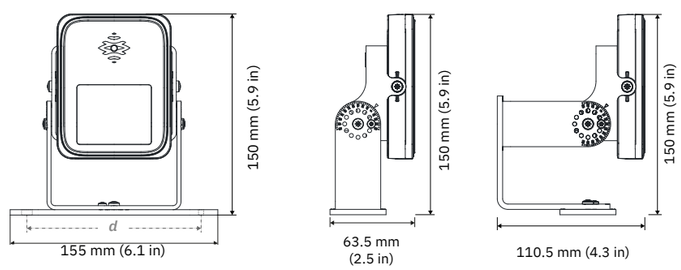

d (center-to-center distance) = 130 mm (5.1 in)
slotted hole Ø = 5.2 mm (0.20 in)

Which cables and lengths do you need for your system?

Find out with our utility: Cable Validator (Sign in to Inxpect Tools).

Cables

Control unit to sensor cable:

CAN bus, totally shielded.

Control unit side: free wires
Sensor side: connector M12, female, 5 poles, A-coded, angled 90°

Length	Radar Sensor 100 SERIES	Radar Sensor 200 SERIES
5 m	-	Part No. **08000110**
10 m	Part No. **08000004**	Part No. **08000111**
15 m	Part No. **08000006**	Part No. **08000112**
20 m	-	Part No. **08000113**

Sensor to sensor cable:

CAN bus, totally shielded.

IN side: connector M12, female, 5 poles, A-coded, angled 90°
OUT side: connector M12, male, 5 poles, A-coded, angled 90°

Length	Radar Sensor 100 SERIES	Radar Sensor 200 SERIES
1 m	-	Part No. **08000126**
3 m	Part No. **08000007**	Part No. **08000120**
5 m	-	Part No. **08000121**
10 m	-	Part No. **08000122**
15 m	Part No. **08000017**	Part No. **08000123**

Bus terminator:

M12, male, 5 poles, A-coded, straight 180°, resistance 120 Ω

Part No. **07000003**

Inxpect product catalogue v3.8 - Copyright © 2026 Inxpect S.p.A. - All rights reserved. - inxpect.com - safety@inxpect.com - Designed and manufactured in Italy by Inxpect.
"Inxpect" and its logo are registered trademarks of Inxpect S.p.A. - Technical specifications subject to change without notice. - All pictures shown are for illustration purposes only.
Inxpect product catalogue v3.8 - Copyright © 2026 Inxpect S.p.A. - All rights reserved. - inxpect.com - safety@inxpect.com - Designed and manufactured in Italy by Inxpect.
"Inxpect" and its logo are registered trademarks of Inxpect S.p.A. - Technical specifications subject to change without notice. - All pictures shown are for illustration purposes only.

Inxpect Safety Radar Equipment

USE CASES

Access detection

Higher safety in robotic welding systems

Inxpect redefines safety for robotic welding systems with double electric rotary tables.
Inxpect 3D radars can be positioned to create a volumetric barrier for access protection, increasing the safety of the setup while dramatically improving productivity.

Main features:
- Natively 3D: volumetric coverage
- Robust to debris: no more false alarms
- Virtually remove the need for protection barriers
- Simplify human/machine interaction
- Speed up the working process
- Improve productivity

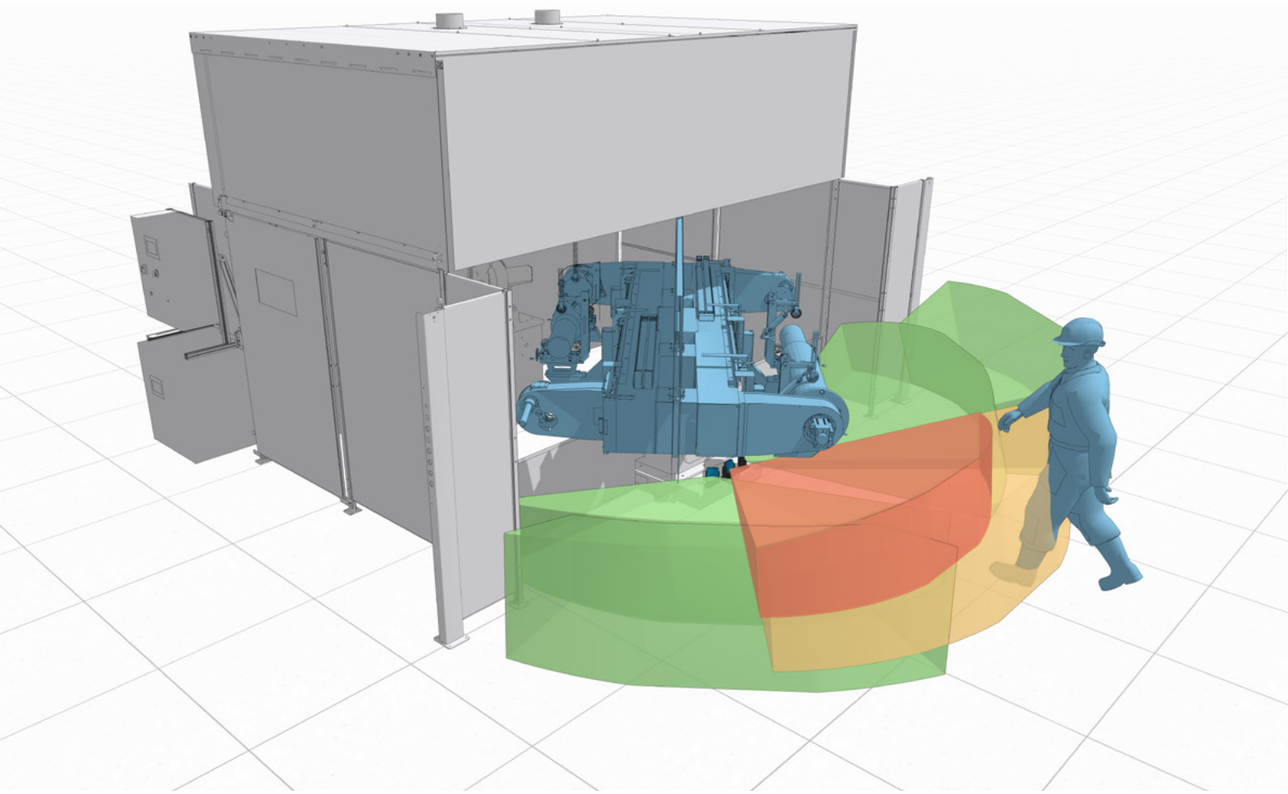

Inxpect product catalogue v3.8 - Copyright © 2026 Inxpect S.p.A. - All rights reserved. - inxpect.com - safety@inxpect.com - Designed and manufactured in Italy by Inxpect.
"Inxpect" and its logo are registered trademarks of Inxpect S.p.A. - Technical specifications subject to change without notice. - All pictures shown are for illustration purposes only.

Access detection

Dynamic safety for mobile gantry machining

Inxpect redefines safety for mobile gantry machining. Thanks to the volumetric coverage, Inxpect 3D radars secure both the floor and the work surface, always ensuring maximum safety for operators.

Main features:
- Robust to debris: no more false alarms
- Natively 3D: volumetric coverage (for both floor and work surface areas)
- Prevent unintentional restarts while operator is in the dangerous area
- Remove human error

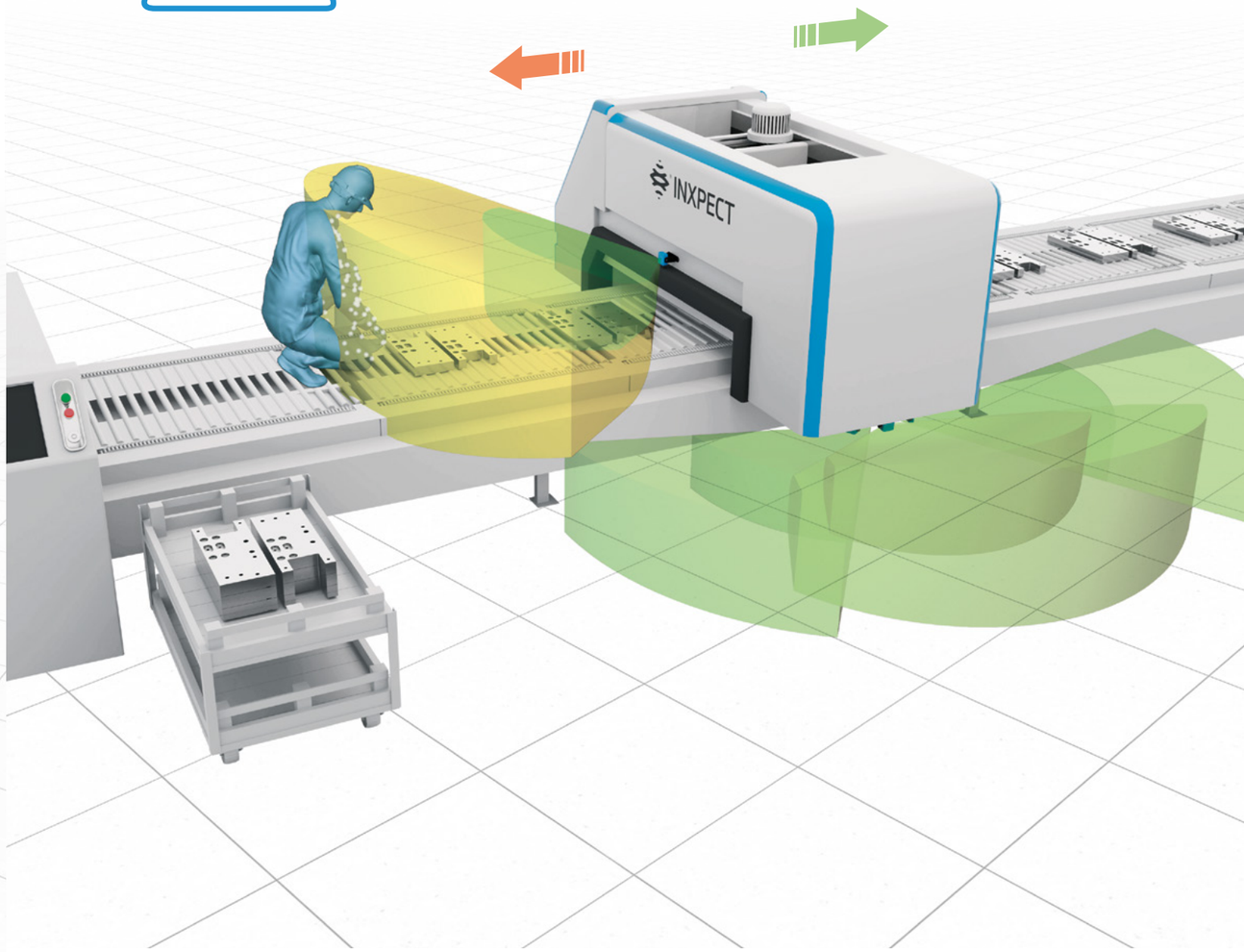

Inxpect product catalogue v3.8 - Copyright © 2026 Inxpect S.p.A. - All rights reserved. - inxpect.com - safety@inxpect.com - Designed and manufactured in Italy by Inxpect.
"Inxpect" and its logo are registered trademarks of Inxpect S.p.A. - Technical specifications subject to change without notice. - All pictures shown are for illustration purposes only.

Access detection

Dynamic safety for robotic cells

Inxpect redefines safety for robotic cells. Thanks to the dynamic configurations, Inxpect's 3D radar sensors monitor the entrance to the dangerous area, always guaranteeing maximum safety for operators and at the same time without ever stopping the operating cycle of the machinery.

Main features:
- Dynamic configurations
- 3D radar: volumetric protection
- Simplify human/machine interaction
- Improve productivity

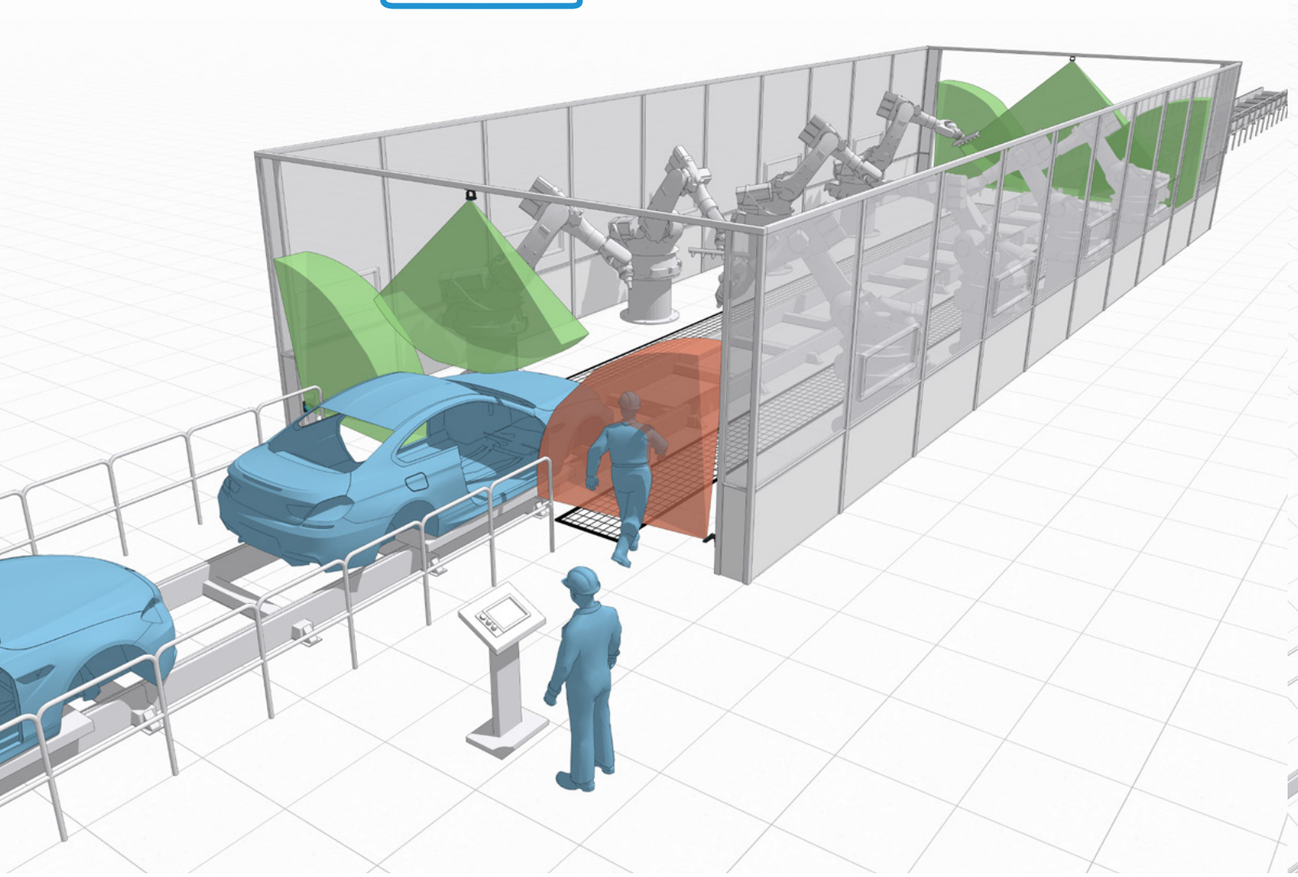

Restart prevention

Higher safety in automation robotic cells

Inxpect removes the human error for robotic cells. Inxpect 3D radars thanks to proprietary algorithms prevent unintentional restarts while operator is in the dangerous area and reduce residual risks, increasing efficiency and productivity.

Main features:
- Natively 3D: volumetric coverage
- Adaptive to changing scenarios
- Prevent unintentional restarts
- Improve human/machine interaction
- Remove human error
- Improve productivity

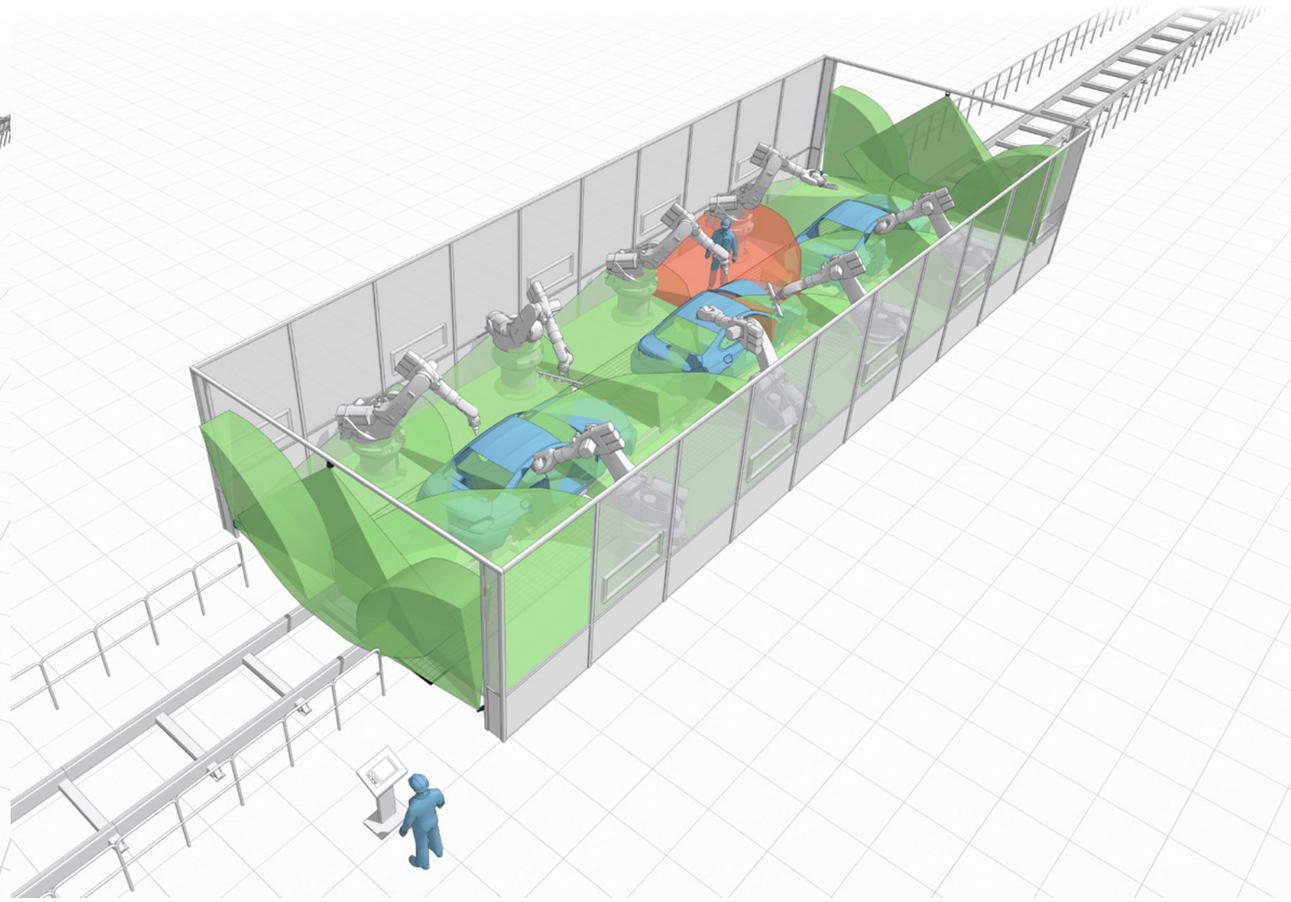

Inxpect product catalogue v3.8 - Copyright © 2026 Inxpect S.p.A. - All rights reserved. - inxpect.com - safety@inxpect.com - Designed and manufactured in Italy by Inxpect.
"Inxpect" and its logo are registered trademarks of Inxpect S.p.A. - Technical specifications subject to change without notice. - All pictures shown are for illustration purposes only.

Inxpect product catalogue v3.8 - Copyright © 2026 Inxpect S.p.A. - All rights reserved. - inxpect.com - safety@inxpect.com - Designed and manufactured in Italy by Inxpect.
"Inxpect" and its logo are registered trademarks of Inxpect S.p.A. - Technical specifications subject to change without notice. - All pictures shown are for illustration purposes only.

Restart prevention

Higher safety in robotic cells

Inxpect refines the state of art of robotics cell and the world of industrial safety in general. Inxpect 3D radars ensure maximum safety within dangerous areas by preventing unintentional restart while operator is in the dangerous area.

Main features:

- Natively 3D: volumetric coverage
- Adaptive to changing scenarios
- Prevent unintentional restarts
- Simplify access procedures
- Remove human error
- Improve productivity

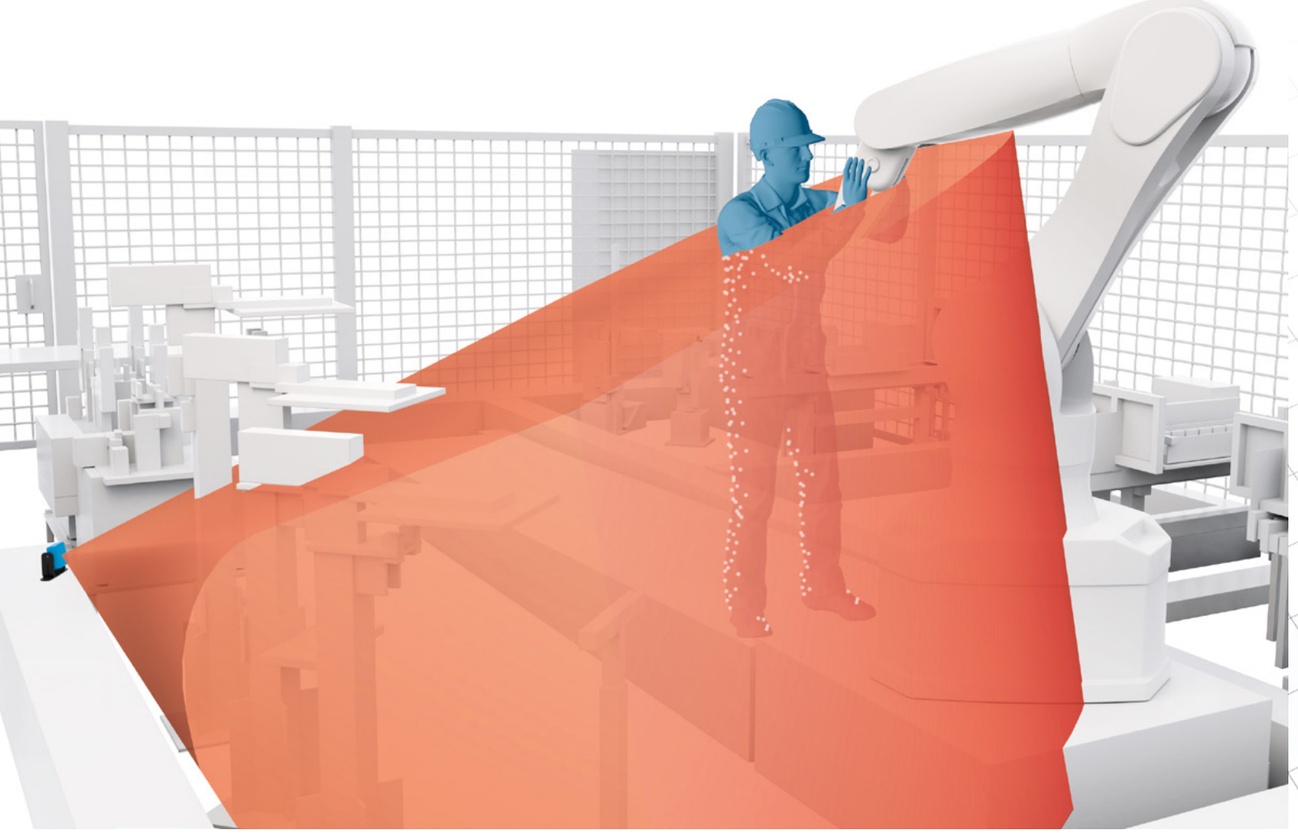

Inxpect product catalogue v3.8 - Copyright © 2026 Inxpect S.p.A. - All rights reserved. - inxpect.com - safety@inxpect.com - Designed and manufactured in Italy by Inxpect.
"Inxpect" and its logo are registered trademarks of Inxpect S.p.A. - Technical specifications subject to change without notice. - All pictures shown are for illustration purposes only.

Restart prevention

Higher safety in wrapping stations

Inxpect redefines the state of the art of automatic wrapping and strapping stations. Inxpect 3D radars simplify human/machine interaction, prevent unintentional restarts and reduce residual risks, increasing efficiency and productivity.

Main features:

- Natively 3D: volumetric coverage
- Adaptive to changing scenarios
- Prevent unintentional restarts
- Simplify access procedures
- Improve human/machine interaction
- Remove human error
- Improve productivity

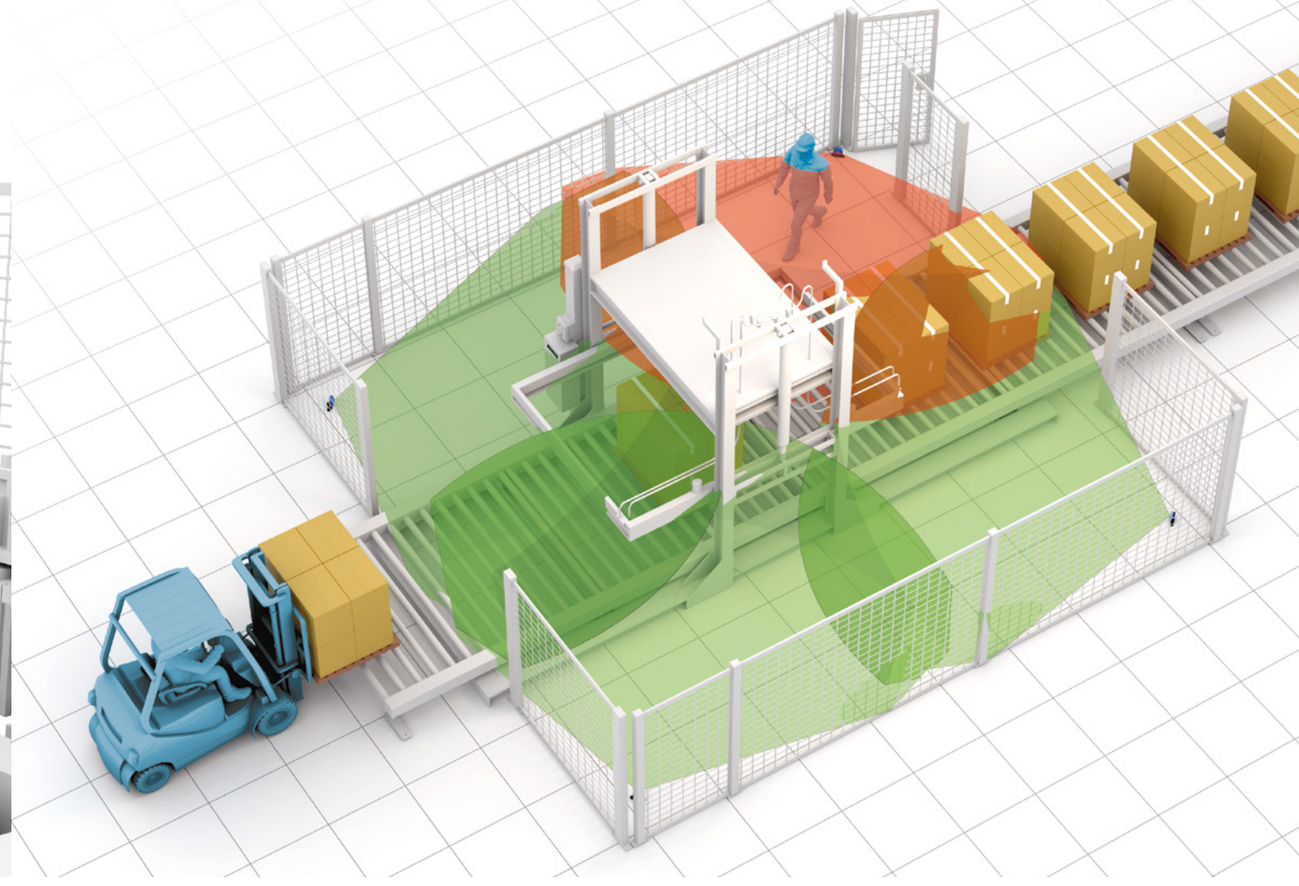

Inxpect product catalogue v3.8 - Copyright © 2026 Inxpect S.p.A. - All rights reserved. - inxpect.com - safety@inxpect.com - Designed and manufactured in Italy by Inxpect.
"Inxpect" and its logo are registered trademarks of Inxpect S.p.A. - Technical specifications subject to change without notice. - All pictures shown are for illustration purposes only.

Restart prevention

Higher safety in automatic palletizing applications

Inxpect safely monitors access to loading/unloading area. This solution combines optical barriers and radars, redefining the state of the art and reducing residual risk. Inxpect 3D radars ensure the application safety: detecting if there is a operator in the area and stopping the machine until the area is clear.

Main features:

- Natively 3D: volumetric coverage (for both floor and work surface areas)
- Prevent unintentional restarts
- Highly dynamic protection
- Reduce residual risk
- Improve productivity

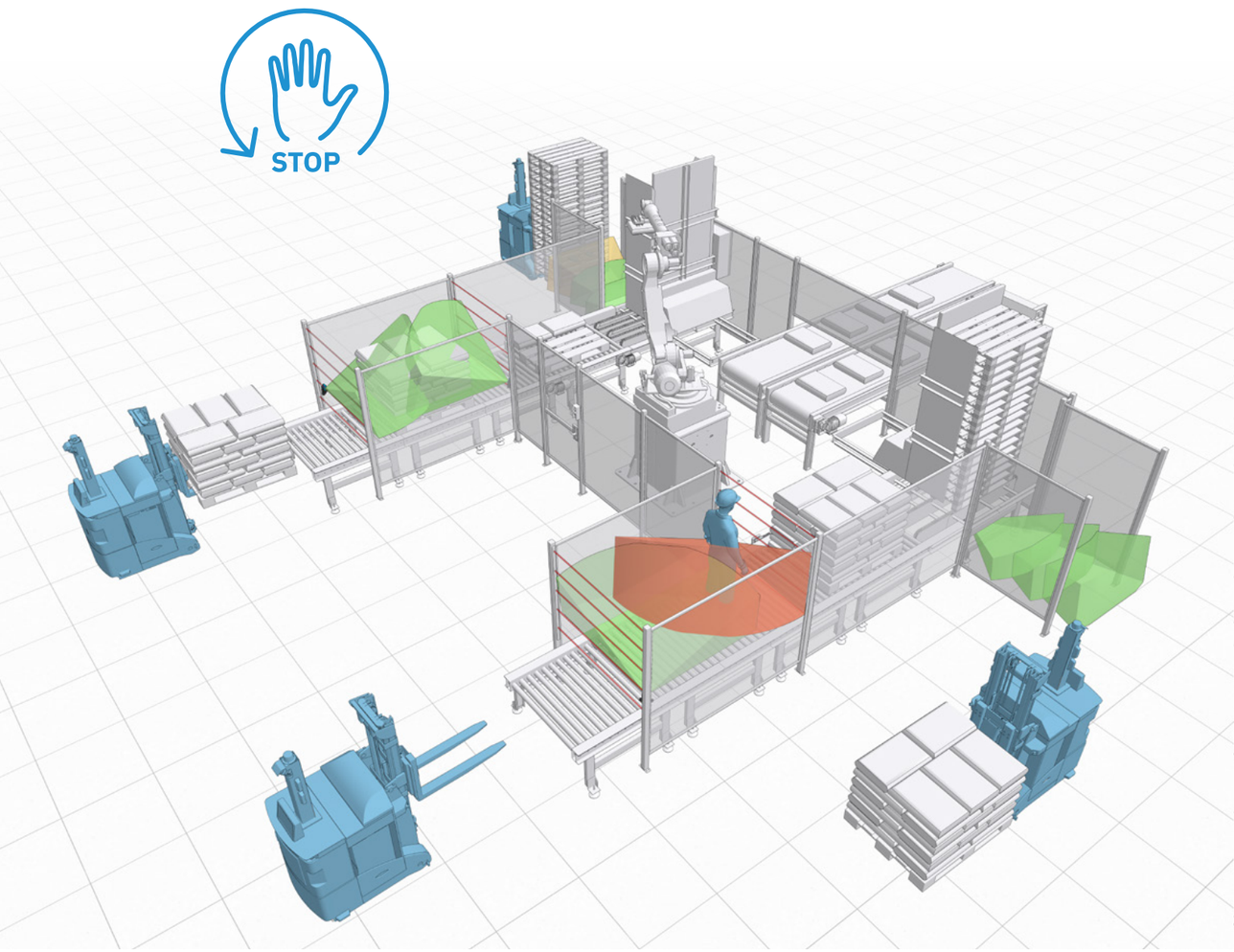

Inxpect product catalogue v3.8 - Copyright © 2026 Inxpect S.p.A. - All rights reserved. - inxpect.com - safety@inxpect.com - Designed and manufactured in Italy by Inxpect.
"Inxpect" and its logo are registered trademarks of Inxpect S.p.A. - Technical specifications subject to change without notice. - All pictures shown are for illustration purposes only.

Restart prevention

Higher safety in automatic loading/unloading CNC applications

Inxpect redefines the state of the art of automatic loading/unloading CNC applications. Inxpect 3D radars simplify human/machine interaction, prevent unintentional restarts and reduce residual risks, increasing efficiency and productivity.

Main features:

- Natively 3D: volumetric coverage
- Prevent unintentional restarts
- Simplify access procedures
- Improve human/machine interaction
- Remove human error
- Improve productivity

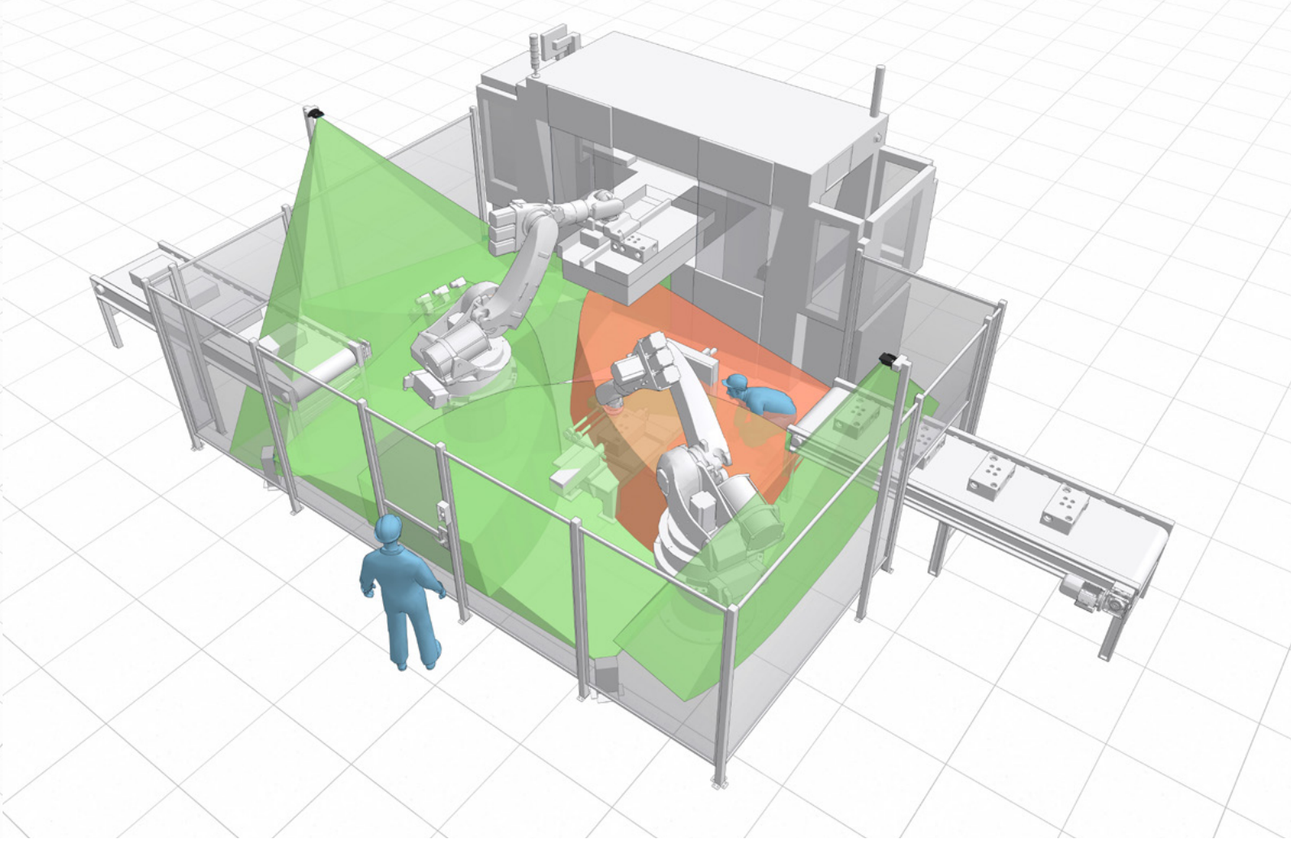

Inxpect product catalogue v3.8 - Copyright © 2026 Inxpect S.p.A. - All rights reserved. - inxpect.com - safety@inxpect.com - Designed and manufactured in Italy by Inxpect.
"Inxpect" and its logo are registered trademarks of Inxpect S.p.A. - Technical specifications subject to change without notice. - All pictures shown are for illustration purposes only.

Restart prevention

Higher safety in underground drilling area

The Inxpect safety radar system provides a reliable solution for human detection in challenging environments. Dust-resistant radar sensors, strategically placed on either side of the rig, monitor up to 9 meters around the machine.

When an operator is detected, the system triggers an immediate alarm, stopping the drilling process and reducing the risk of accidents.

Main features:

- Natively 3D: volumetric coverage
- Adaptive to changing scenarios
- Simplify access procedures
- Improve human/machine interaction
- Remove human error
- Improve productivity

Restart prevention

Higher safety in surface drilling area

Our radar safety system is the ideal solution for drilling machines operating in harsh environments, offering exceptional robustness against dust and water.

Thanks to the radar, there is no need for a front cage, improving usability and operational efficiency without compromising safety. This allows easier access and a more streamlined workflow, ensuring maximum productivity in tough conditions.

Main features:

- Natively 3D: volumetric coverage
- Adaptive to changing scenarios
- Simplify access procedures
- Improve human/machine interaction
- Remove human error
- Improve productivity

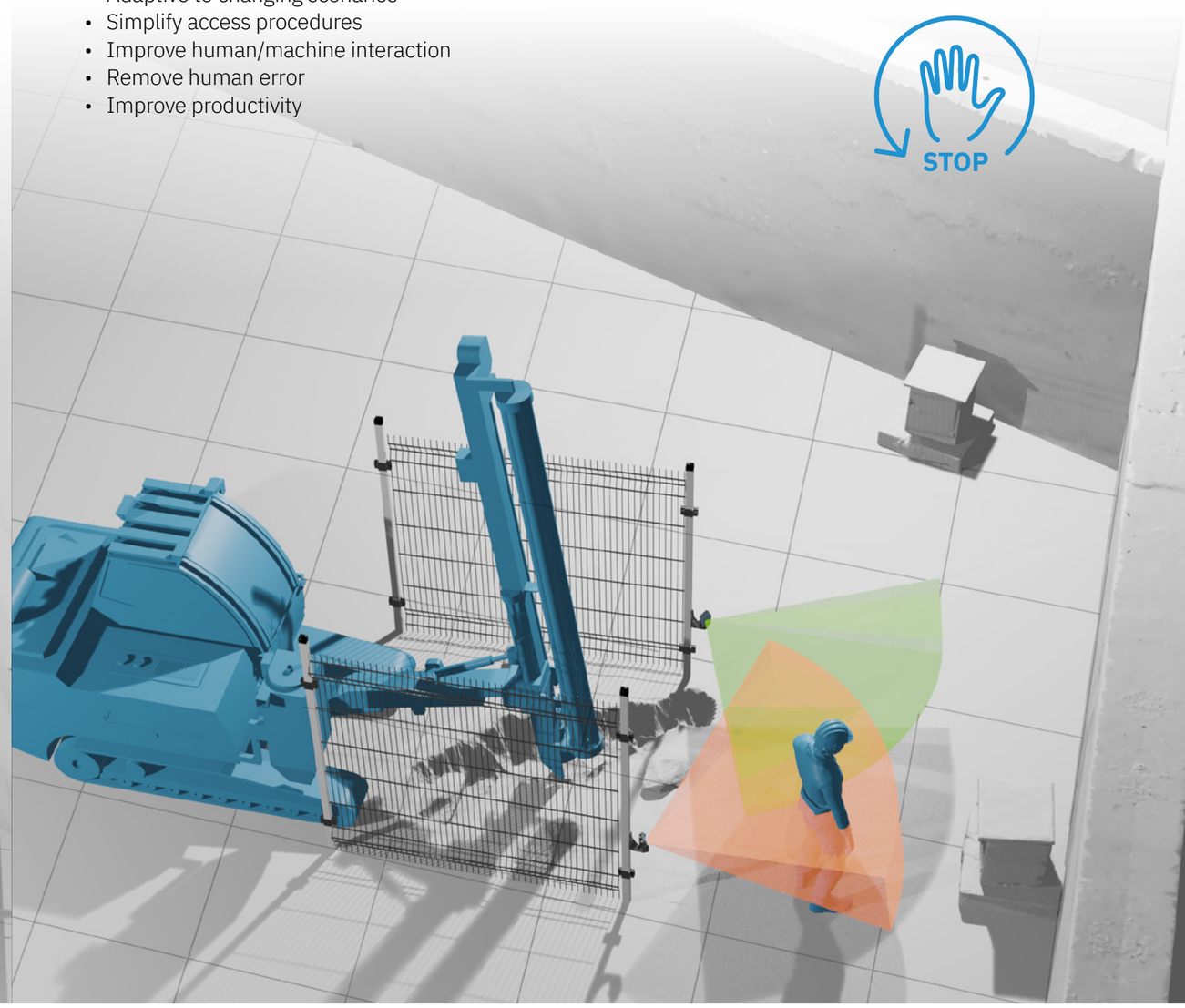

Inxpect product catalogue v3.8 - Copyright © 2026 Inxpect S.p.A. - All rights reserved. - inxpect.com - safety@inxpect.com - Designed and manufactured in Italy by Inxpect.
"Inxpect" and its logo are registered trademarks of Inxpect S.p.A. - Technical specifications subject to change without notice. - All pictures shown are for illustration purposes only.

Inxpect product catalogue v3.8 - Copyright © 2026 Inxpect S.p.A. - All rights reserved. - inxpect.com - safety@inxpect.com - Designed and manufactured in Italy by Inxpect.
"Inxpect" and its logo are registered trademarks of Inxpect S.p.A. - Technical specifications subject to change without notice. - All pictures shown are for illustration purposes only.

Smart collision avoidance

Indoor application: Automated Guided Vehicle

Inxpect brings dynamic safety to AGV. Inxpect 3D radars are ideal anti-collision sensor: they're robust to dust, debris, smoke, rain and light reflections. They are effective at detecting suspending loads, provide volumetric coverage and fit perfectly for indoor and outdoor applications.

Main features:
- Natively 3D: volumetric coverage
- Effective at detecting suspended loads
- Robust to smoke, dust, debris, rain, fog, snow and light reflections
- Indoor and outdoor applications

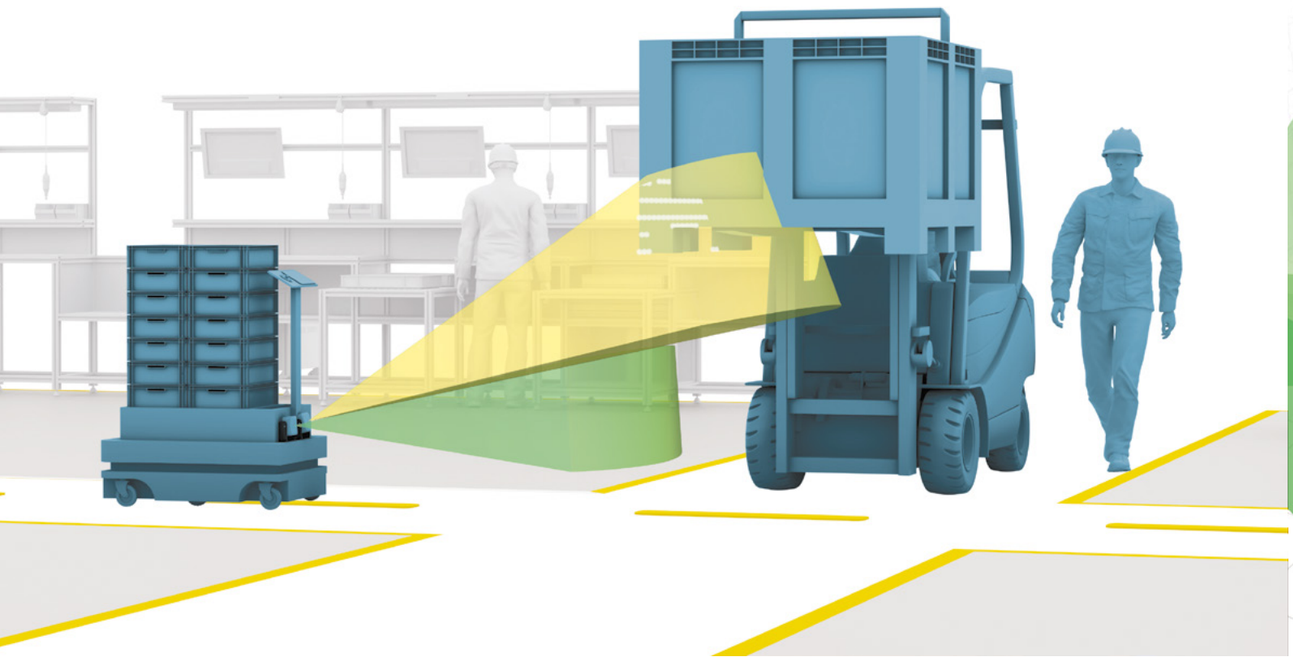

Inxpect product catalogue v3.8 - Copyright © 2026 Inxpect S.p.A. - All rights reserved. - inxpect.com - safety@inxpect.com - Designed and manufactured in Italy by Inxpect.
"Inxpect" and its logo are registered trademarks of Inxpect S.p.A. - Technical specifications subject to change without notice. - All pictures shown are for illustration purposes only.

Smart collision avoidance

Indoor application: Pick and Place

Inxpect brings dynamic safety to pick and place applications. Inxpect 3D radar simplifies human/machine interaction, provides highly dynamic protection and allows for simple programming. Being adaptive to changing scenarios, Inxpect 3D radar increases efficiency and productivity.

Main features:
- Natively 3D: volumetric coverage
- Adaptive to changing scenarios
- Highly dynamic protection
- Simple programming

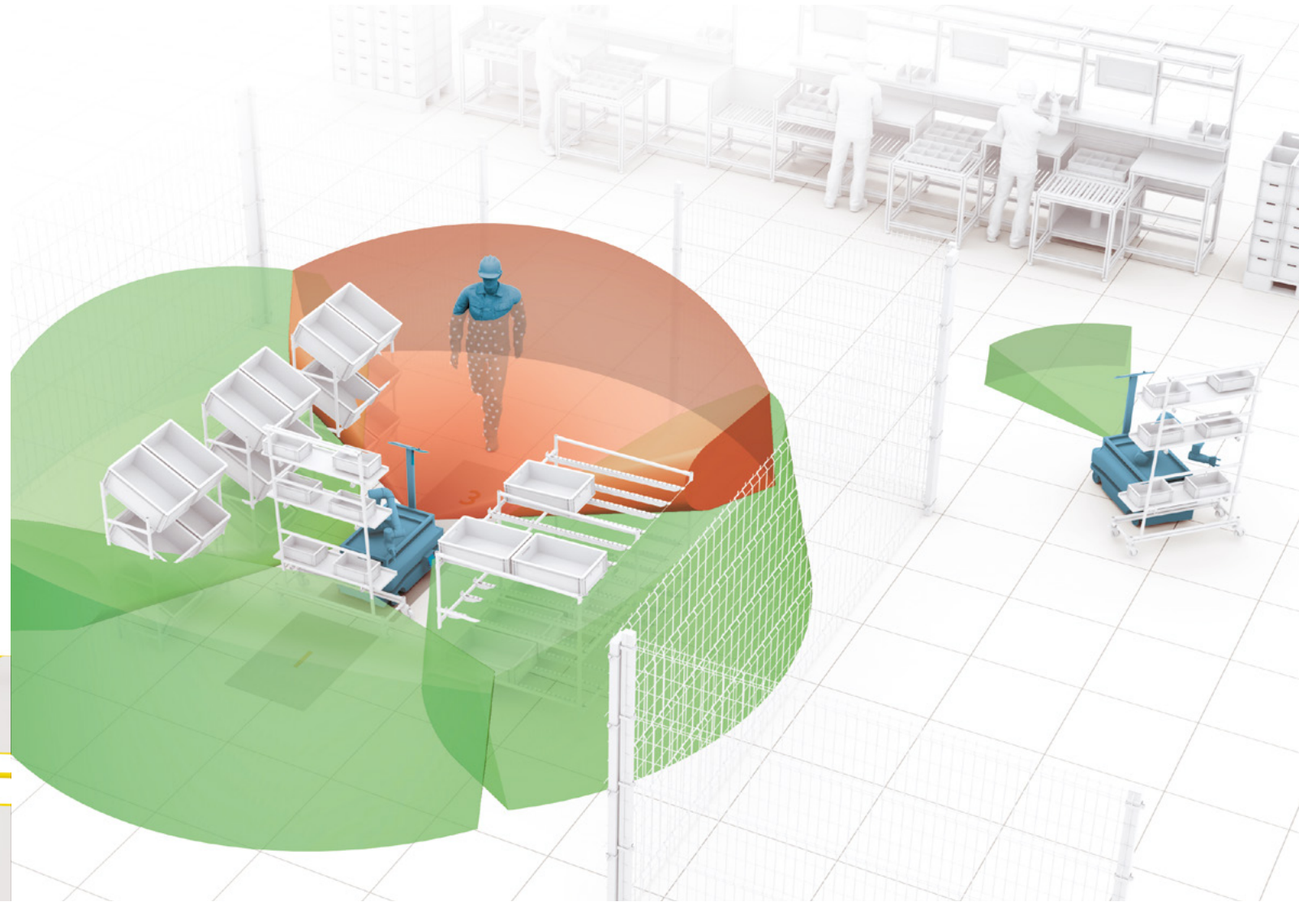

Inxpect product catalogue v3.8 - Copyright © 2026 Inxpect S.p.A. - All rights reserved. - inxpect.com - safety@inxpect.com - Designed and manufactured in Italy by Inxpect.
"Inxpect" and its logo are registered trademarks of Inxpect S.p.A. - Technical specifications subject to change without notice. - All pictures shown are for illustration purposes only.

Smart collision avoidance

Outdoor application: Construction Site

Inxpect ensures maximum safety even in harsh environmental conditions. Dust, fog, rain and swarf generated by production processes do not cause false alarms. The volumetric coverage of Inxpect 3D radars prevents collision with suspended loads or airborne elements.

Main features:

- Robust to smoke, dust, debris, rain, fog, snow and light reflections
- Reduce false alarms
- 3D radar: volumetric protection
- Operating temperature -30° +60°

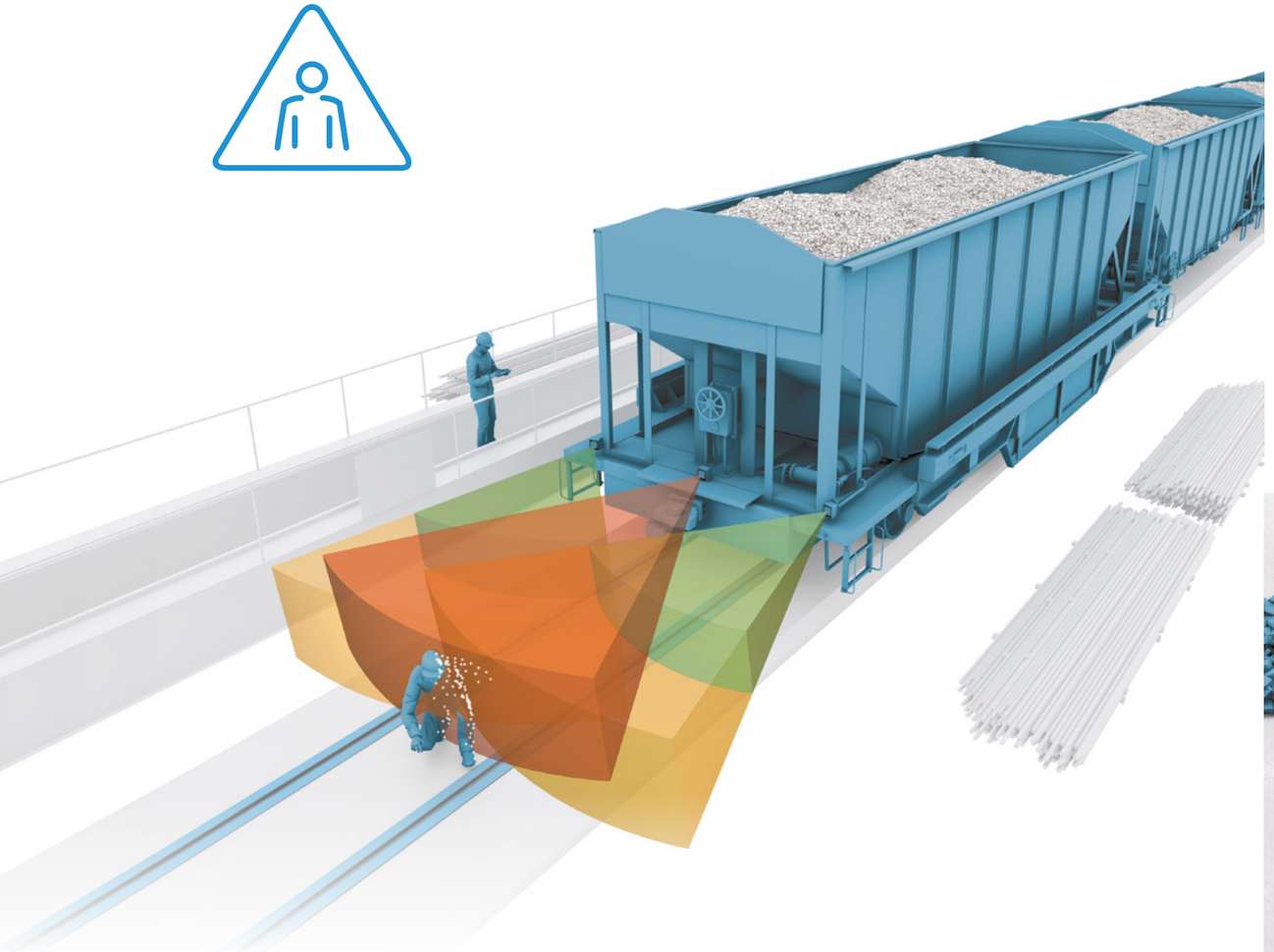

Inxpect product catalogue v3.8 - Copyright © 2026 Inxpect S.p.A. - All rights reserved. - inxpect.com - safety@inxpect.com - Designed and manufactured in Italy by Inxpect.
"Inxpect" and its logo are registered trademarks of Inxpect S.p.A. - Technical specifications subject to change without notice. - All pictures shown are for illustration purposes only.

Smart collision avoidance

Outdoor application: Construction Site

Inxpect ensures maximum safety even in harsh environmental conditions. Inxpect 3D radars are an excellent aid to monitoring of the movement areas of operating machines because they allow to have a complete analysis of the area, even on multiple levels.

Main features:

- Robust to smoke, dust, debris, rain, fog, snow and light reflections
- Reduce false alarms
- Indoor and outdoor applications
- 3D radar: volumetric protection
- Operating temperature -30° +60°

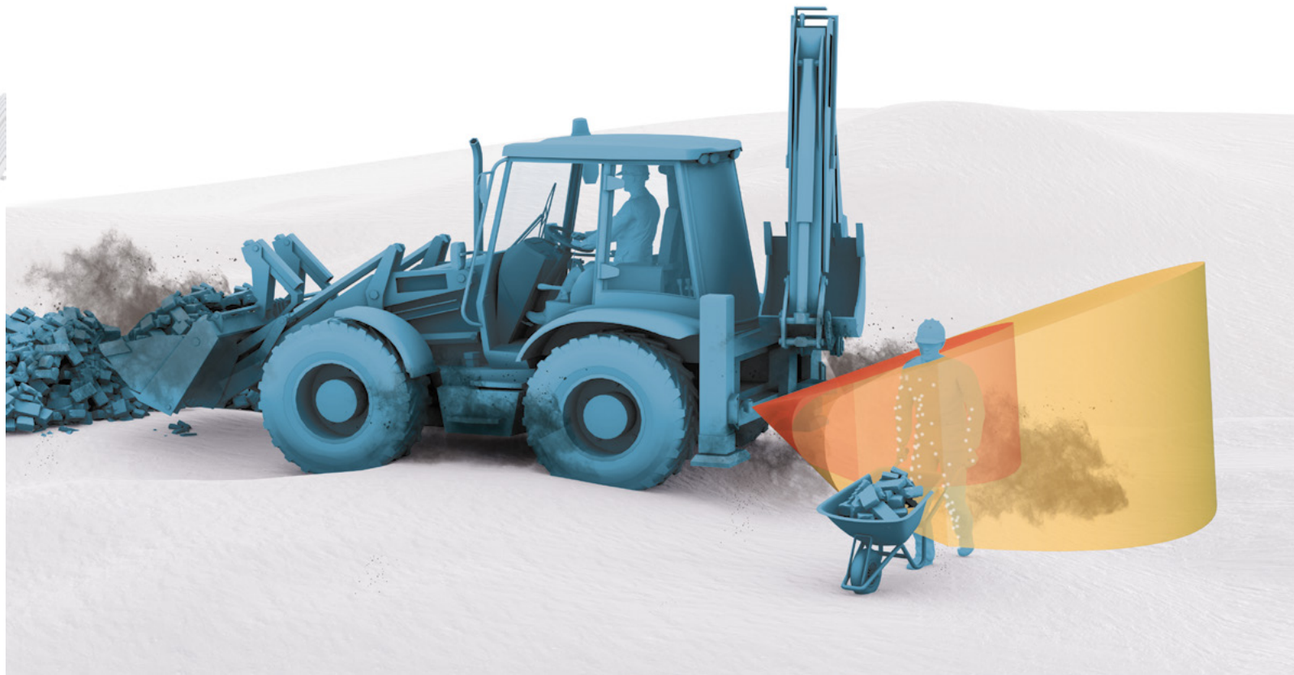

Inxpect product catalogue v3.8 - Copyright © 2026 Inxpect S.p.A. - All rights reserved. - inxpect.com - safety@inxpect.com - Designed and manufactured in Italy by Inxpect.
"Inxpect" and its logo are registered trademarks of Inxpect S.p.A. - Technical specifications subject to change without notice. - All pictures shown are for illustration purposes only.

INXPECT
Sense the world in 3D

Inxpect S.p.A.
Via Serpente, 91
25131 Brescia (IT)
T +39 0305785105
safety@inxpect.com
www.inxpect.com

Inxpect Deutschland GmbH
Im Gewerbepark 27
91093 Heßdorf (DE)
T +49 91357366926
hello@inxpect.de
www.inxpect.de

Inxpect Electronics Co., Ltd.
Room 707, 6th Floor, Building 1,
No.8 Dongdaqiao Road,
Chaoyang District, Beijing (CN)
hello-china@inxpect.com
www.inxpect.com.cn

Inxpect North America Corp.
10375 N. Baldev Court, Suite B
Milwaukee, Wisconsin 53092 (US)
T +1 4148587644
hello@inxpect.us
www.inxpect.us